DIAL GAUGE

240p

240p

241p

242p

243p

243p

244p

244p

245p

245p

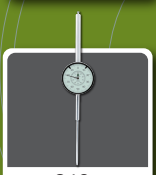
246p

246p

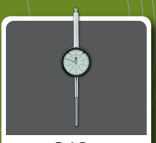
246p

246p

247p

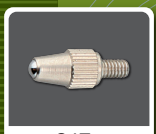
247p

247p

248p

248p

249p

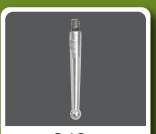
249p

250p

250p

251p

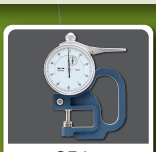
251p

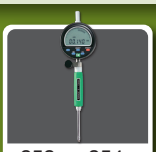
252p～254p

255p～257p

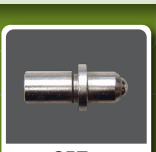
257p

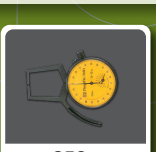
258p

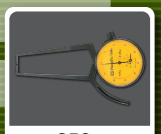
258p

259p

259p

260p

260p

260p

261p

261p

261p

261p

262p

262p

263p

263p

264p

264p

265p

267p

267p

268p

268p

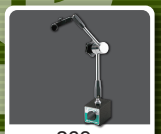
269p

269p

269p

270p～271p

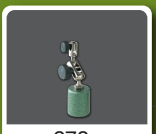
272p

272p

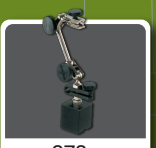
273p

273p

274p

274p

Dial Gauge Line-up by Size

※Background grid: approx. 10mm

DET-234S1 P242

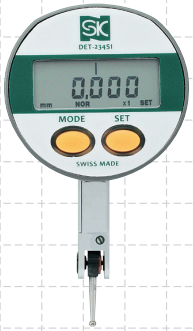

DET-234S2 P242

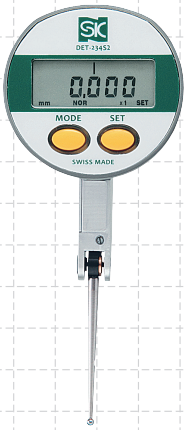

WTI-2030S P248
WTI-2030R P248
WTI-2030W P248

WTI-2038S P248
WTI-2038R P248
WTI-2038W P248

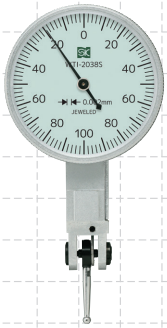

WTI-8030S P249
WTI-8030R P249
WTI-8030W P249

WTI-8038S P249
WTI-8038R P249
WTI-8038W P249

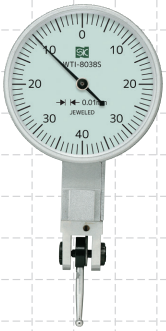

DEI-233S1 P240

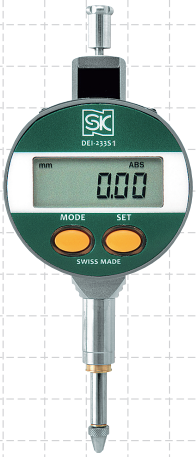

DEI-233S2 P240

DEI-WKS1 P241

DEI-WKS2 P241

DEI-WKS-N P241

WDI-0342 P247

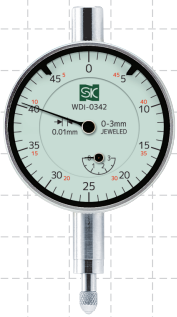

WDI-0542 P247

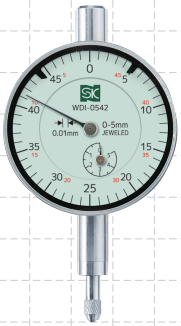

DEI-127 P243

DI-10KD P243

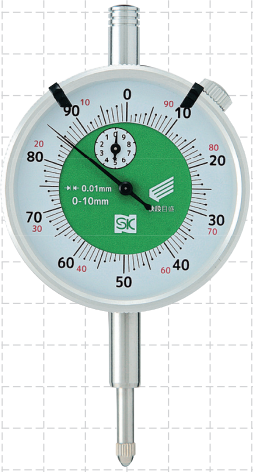

WDI-10 P244

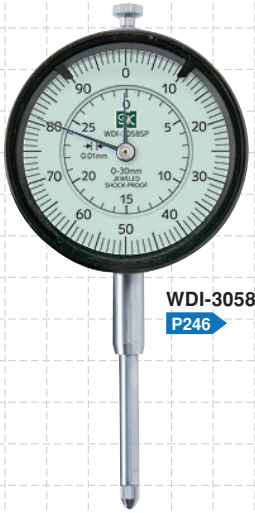

WDI-3058SP
P246

WDI-5058SP
P246

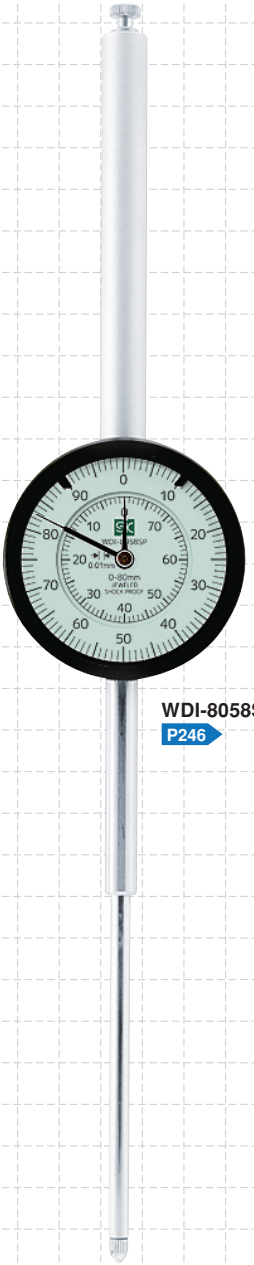

WDI-8058SP
P246

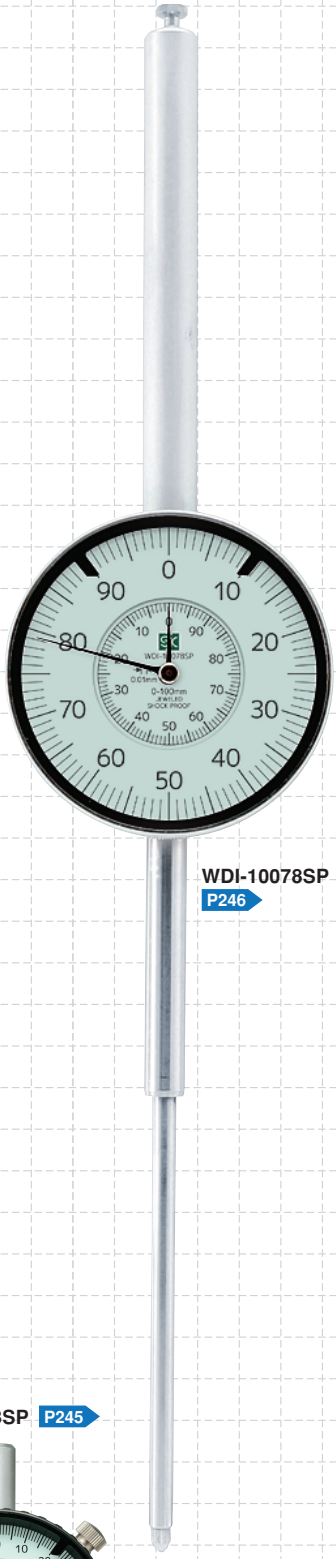

WDI-10078SP
P246

DI-1058 P244

WDI-0558SP P245

WDI-1058SP P245

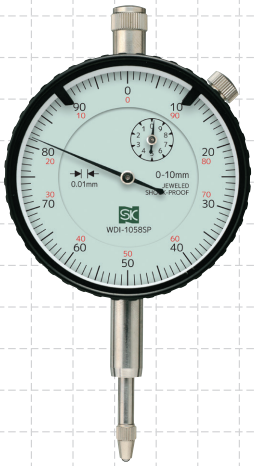

WDI-0158SP P245

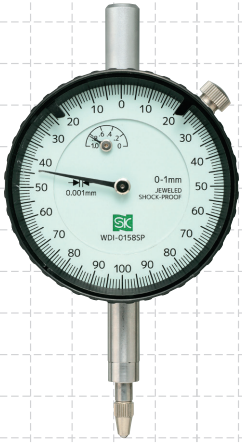

S line series

S-LINE DIGITAL INDICATOR (IP65)

T PDI

IP65 rated, can be used in cutting fluid environment.
Small type - 109mm long, 19mm thick.

- IP rating for electrical equipment is defined based on IEC standard for water and solid body protection
- IP indication

IP 6 5
- 2nd digit : water proof rating
- 1st digit : direct contact-protection for ingress of solid foreign object

Degrees of protection against solid foreign objects			
1st digit	Description	Definition	Testing for
6	Solid	No ingress of dust allowed	Complete protection against contact
Degrees of protection against water			
2nd digit	Description	Definition	Testing for
5	Protected against low pressure water jet	No harmful effects from direct jet of water from any direction	Spray rotating equipment with 12.5L/min flow for at least 3 min. at distance of 2.5~3m

DEI-233S2

Reference standard for comparative measurement ▶
Block Gauge P42 ~49

Importing measurement data to PC ▶
Data Transfer Cable P240

Holding measuring instruments ▶
Magnetic Base P266 ~274

Precision measuring instrument holder ▶
Comparator Stand P282 ~283

Rust prevention ▶
Zerust Film for Steel P380

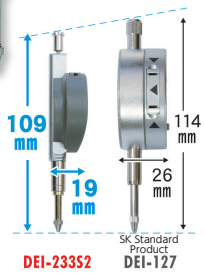

● DIMENSIONS Units : mm

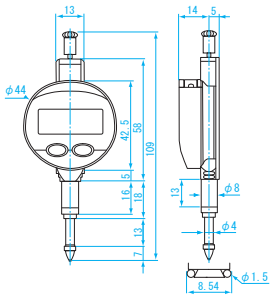

USE
- Measuring surface flatness, checking tool set up, axial runout, checking squareness

MATERIAL
- Stem & spindle: Stainless steel ●Probe: Carbide

FEATURES
- IP65 rating digital indicator electronics are protected against dust and water
- Small type dial gauge is suitable for use in a narrow space
- Measuring direction (+/-) switching function
- Preset function ●Auto power off function (after approx. 4 hrs.)
- Can select minimum reading display: 0.01mm/0.001mm (DEI-233S2)

POWER
- One CR2032 (Lithium) battery included for testing

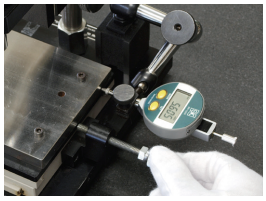

Option: DATA TRANSFER CABLE ⇒ P240

※ Quantization Error (± 1 digit) not included

Order No.	Model No.	Measuring Range (mm)	Resolution (mm)	Minimum Reading Display (mm)	Maximum Error※ (μm)	Measuring Force (N)	Repeatability (μm)	Weight
151724	DEI-233S1	0~12.5	0.01	0.01	20	Less than 1.5	2	70g
151725	DEI-233S2		0.001	0.01/0.001 (switchable)	5			

S line series

DATA TRANSFER CABLE FOR S-LINE DIAL INDICATOR / VERNIER CALIPER / MICROMETER

(Cable)

Set of cable and software. Measured value can be imported to PC.
GO/NOGO judgment by tolerance set function and recording measured value are possible.

DTC-1

DTC-2

- Easy to know by color change and beep when out of tolerance
- Measured value can be recorded automatically at a specific interval (0.1 ~ 60 min.)

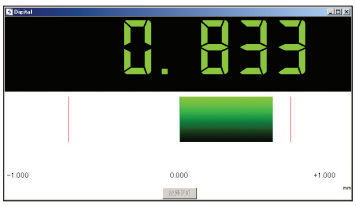

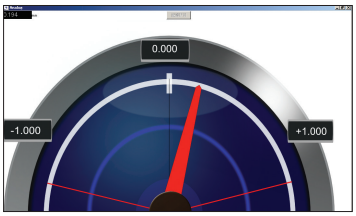

Image of companion software

USE
- For importing measured value to PC

FEATURES
- Measured value can be input directly to specified OS application such as Microsoft Excel or Notepad

COMPATIBILITY
- Connectable product with DTC-1

152006 ~ 152008	S-LINE DIGITAL CALIPER (D-***IP67S)	P162
151227 ~ 151229 151234	S-LINE DIGITAL MICROMETER (MCD-**IP67S2) S-LINE DIGITAL BLADE MICROMETER (MCD-25IP67BS2)	P202 P203
151726 ~ 151727 151716	S-LINE DIGITAL INDICATOR (DEI-WKS*)	P241
151851 ~ 151858	S-LINE DIGITAL THREE-POINT INTERNAL MICROMETER (MCD-****IP67S)	P220

- Connectable product with DTC-2

151724 ~ 151725	S-LINE DIGITAL INDICATOR (DEI-233S*)	P240
151728 ~ 151729	S-LINE DIGITAL TEST INDICATOR (DET-234S*)	P242

APPLICABLE OS
- WindowsXP, Vista, 7, 8.1, 10 ●Android (Device with USB OTG support function)※
  ※Requires a USB host OTG cable

PRODUCT INCLUDES
- Cable ●Software

Downloading Android App [SLOG]
ANDROID アプリ Google play

Order No.	Model No.	Connector type	Length
152033	DTC-1	USB※	3m※
152034	DTC-2		

※ D-SUB9 pin type and cable in desired length are also available (USB type: Max. 7m / D-SUB9 pin type: Max. 10m)

S-LINE DIGITAL INDICATOR

S line series

T PDI 0

GO/ NOGO lights up with tolerance setting function.
0.0001mm (0.1 μm) resolution type is also available.

Reference standard for comparative measurement ▶ Block Gauge P42 ~49

Importing measurement data to PC ▶ Data Transfer Cable P240

Holding measuring instruments ▶ Magnetic Base P266 ~274

Precision measuring instrument holder ▶ Comparator Stand P282 ~283

Rust prevention ▶ Zerust Film for Steel P380

DEI-WKS2

DEI-WKS-N
(Minimum reading: 0.0001mm)

GO/NOGO lights up with tolerance setting function

USE
- Measuring surface flatness, checking tool set up, axial runout, checking squareness

MATERIAL
- Stem & spindle: Stainless steel ●Probe: Carbide

FEATURES
- GO/NOGO lights up with tolerance setting function enables instant judgement of Pass or Fail, suitable for inspecting mass-produced parts
- Display can rotate 270° to desired position
- Mass function
- Button for "favorite function" to call up frequently used functions
- MIN, MAX measurement function
- Measuring direction (+/-) switching function
- Preset function
- Auto display off function (after approx. 20 min.)
- Auto power on function
- Selectable minimum reading display: 0.01mm/0.001mm (DEI-WKS2)
  0.001mm/0.0001mm (DEI-WKS-N)

POWER
- One CR2032 (Lithium) battery included for testing

Option: DATA TRANSFER CABLE ⇒ P240

● DIMENSIONS Units : mm

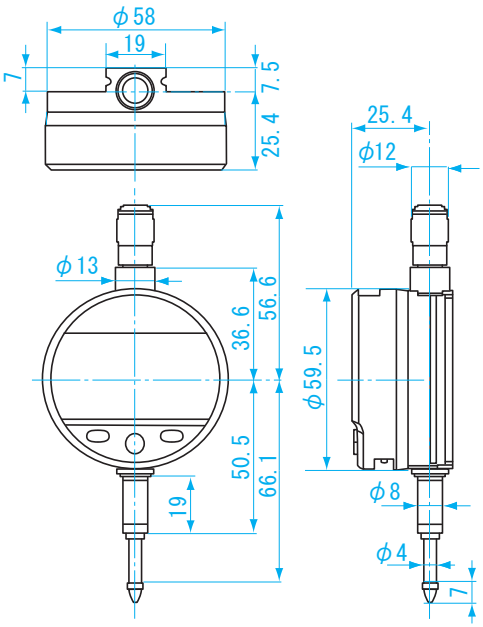

※ Quantization Error (± 1 digit) not included

Order No.	Model No.	Measuring Range (mm)	Resolution (mm)	Minimum Reading Display (mm)	Maximum Error※ (μm)	Measuring Force (N)	Repeatability (μm)	Weight
151726	DEI-WKS1	0-12.5	0.01	0.01	20	Less than 1.5	2	115g
151727	DEI-WKS2		0.001	0.01/0.001 (switchable)	3			
151716	DEI-WKS-N		0.0001	0.001/0.0001 (switchable)	2.3		0.5	140g

S line series

S-LINE DIGITAL TEST INDICATOR (IP65)

T PDI 0

IP65 rating electronic digital test indicator, can be used in cutting fluid environment.
Has both digital and analog display for easy reading.

Reference standard for comparative measurement▶ Block Gauge P42 ~49
Importing measurement data to PC▶ Data Transfer Cable P240
Holding measuring instruments▶ Height Gauge P196 ~200
Holding measuring instruments▶ Magnetic Base P266 ~274
Precision measuring instrument holder▶ Comparator Stand P282 ~283
Rust prevention▶ Zerust Film for Steel P380

DET-234S1

DET-234S2

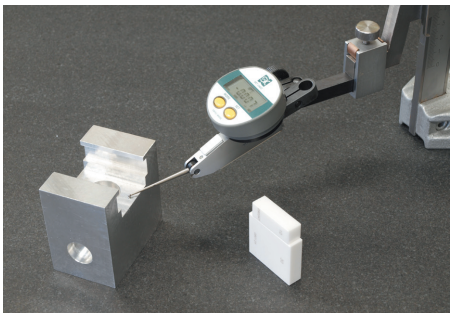

- IP rating for electrical equipment is defined based on IEC standard for water and solid body protection
- IP indication

IP 6 5
- 2nd digit : water proof rating
- 1st digit : direct contact-protection for ingress of solid foreign object

Degrees of protection against solid foreign objects			
1st digit	Description	Definition	Testing for
6	Solid	No ingress of dust allowed	Complete protection against contact
Degrees of protection against water			
2nd digit	Description	Definition	Testing for
5	Protected against low pressure water jet	No harmful effects from direct jet of water from any direction	Spray rotating equipment with 12.5L/min flow for at least 3 min. at distance of 2.5~3m

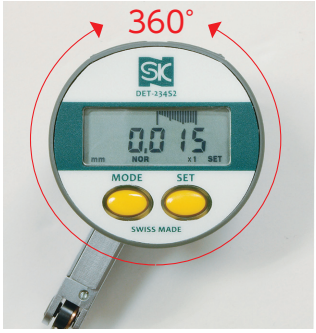

Display rotates 360° for setting zero

USE
- Lever type digital test indicator
- Measuring surface flatness, checking tool setup, axial runout, checking squareness

MATERIAL
- Probe: Carbide

FEATURES
- **IP65** rating electronic digital test indicator. Electronics are protected against dust and water.
- The display has both digital and analog display for easy reading
- Display rotates 360° for setting zero
- MIN, MAX measurement function
- Measuring direction (+/-) switching function
- Preset function
- Auto power off function (after approx. 2 hrs.)
- Selectable minimum reading display: 0.01mm/0.001mm

POWER
- One CR2032 (Lithium) battery included for testing

ACCESSORIES
- ϕ8mm dove tail stem

Option: DATA TRANSFER CABLE ⇒ P240

● DIMENSIONS

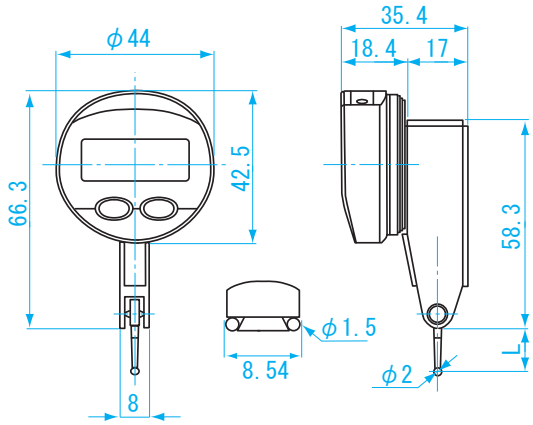

Units : mm

Model No.	L
DET-234S1	12.5
DET-234S2	36

※ Replacement probes are also available

■ Probe for S-line test indicator

Order No.	Model No.	Applicable Model No.
151718	DET-234S1-S	DET-234S1
151719	DET-234S2-S	DET-234S2

※ Requires calibration with standard when replacing probe

※ Quantization Error (± 1 digit) not included

Order No.	Model No.	Measuring Range (mm)	Resolution (mm)	Minimum Reading Display (mm)	Maximum Error※ (mm)	Backlash Error (μm)	Measuring Force (N)	Repeatability (μm)	Weight
151728	DET-234S1	0~0.8	0.001	0.01/0.001 (switchable)	10	4	Less than 0.2	3	73g
151729	DET-234S2	0~0.5				5			75g

DIGITAL INDICATOR

T PDI 0

Digital dispray. Good performance and reasonable price.

Reference standard for comparative measurement▶ Block Gauge P42 ~49

Holding measuring instruments▶ Magnetic Base P266 ~274

Precision measuring instrument holder▶ Comparator Stand P282 ~283

Rust prevention▶ Zerust Film for Steel P380

● DIMENSIONS Units : mm

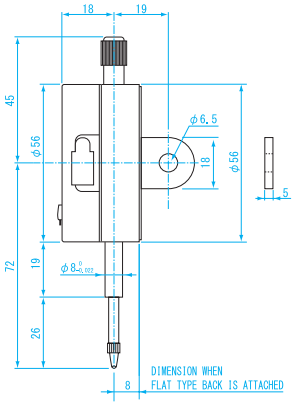

USE
- Measuring surface flatness, checking tool set up, axial runout, checking squareness

MATERIAL
- Body&probe: Steel

FEATURES
- Easy to read digital display
- Display hold function
- Auto power off function (after approx. 5 min.)
- Resolution 0.01mm, Measuring Range 12.7mm
- Flat type back and center-lug back included

POWER
- One CR2032 (Lithium) battery included for testing

※ Quantization Error (± 1 digit) not included

Order No.	Model No.	Measuring Range (mm)	Resolution (mm)	Maximum permissble Error※ (μm)	Measuring Force less than (N)	Weight
151715	DEI-127	0~12.7	0.01	±20	1.5	140g

DIAL GAUGE KAIDAN

T PDI 0

Easy to read. Kaidan graduation prevents misreading.

Reference standard for comparative measurement▶ Block Gauge P42 ~49

GO/NOGO judgment▶ Limit Mark Sticker P247

Holding measuring instruments▶ Magnetic Base P266 ~274

Precision measuring instrument holder▶ Comparator Stand P282 ~283

Rust prevention▶ Zerust Film for Steel P380

● DIMENSIONS

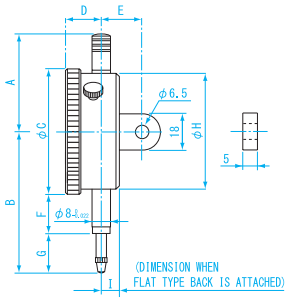

USE
- For checking surface roughness, workpiece mounting, shaft runout, squareness, and other displacement measurements

MATERIAL
- Body: Aluminum ●Probe: Steel

FEATURES
- Easy to read stepped millimeter graduation
- Graduation 0.01mm, Measuring Range 0~10mm
- Limit indicator clips included
- Flat type back, and center-lug back included

Units : mm

Model No.	A	B	C	D	E	F	G	H	I
DI-10KD	45	67	60	16	20	18	19	55	9

Order No.	Model No.	Graduation (mm)	Measuring Range (mm)	Dial Reading (mm)	Backlash Error (μm)	Measuring Force less than (N)	1 Revolution (mm)	Indication Error 1/10 rev (μm)	Error over entire range (μm)	Repeatability (μm)	Weight
151676	DI-10KD	0.01	0~10	±0-100	5	1.5	1	8	±20	5	125g

DIAL GAUGE STANDARD TYPE NEW!

T PDI 0

Standard size.
Good performance and reasonable price.

Reference standard for comparative measurement ▶ Block Gauge P42 ~49
GO/NOGO judgment ▶ Limit Mark Sticker P247
Holding measuring instruments ▶ Magnetic Base P266 ~274
Precision measuring instrument holder ▶ Comparator Stand P282 ~283
Rust prevention ▶ Zerust Film for Steel P380

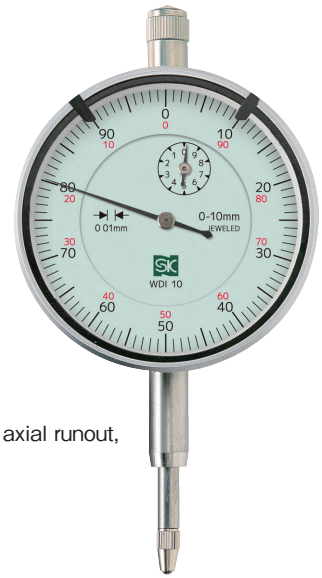

USE
- Measuring surface flatness, checking tool set up, axial runout, checking squareness

MATERIAL
- Body&probe: Steel

FEATURES
- Graduation 0.01mm
- Limit indicator clips included
- Jeweled bearings
- Green scale plate
- Flat type back and center-lug back included

● DIMENSIONS

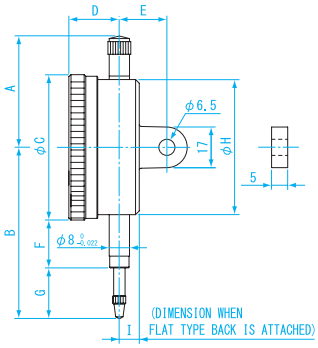

Units : mm

Model No.	A	B	C	D	E	F	G	H	I
WDI-10	43.5	68.5	58	16.5	19	18.5	21	53.5	8

Order No.	Model No.	Graduation (mm)	Measuring Range (mm)	Dial Reading (mm)	Backlash Error (μm)	Measuring Force less than (N)	1 Revolution (mm)	Indication Error 1/10 rev (μm)	Error over entire range (μm)	Repeatability (μm)	Weight (including flat type back)
151520	WDI-10	0.01	0~10	±0-100	5	1.5	1	8	±20	5	180g

DIAL GAUGE STANDARD TYPE

T PDI 0

Standard size.
Good performance and reasonable price.

Reference standard for comparative measurement ▶ Block Gauge P42 ~49
GO/NOGO judgment ▶ Limit Mark Sticker P247
Holding measuring instruments ▶ Magnetic Base P266 ~274
Precision measuring instrument holder ▶ Comparator Stand P282 ~283
Rust prevention ▶ Zerust Film for Steel P380

USE
- Measuring surface flatness, checking tool set up, axial runout, checking squareness

MATERIAL
- Body&probe: Steel

FEATURES
- Limit indicator clips included
- Jeweled bearings
- Yellow scale plate
- Flat type back and center-lug back included

● DIMENSIONS

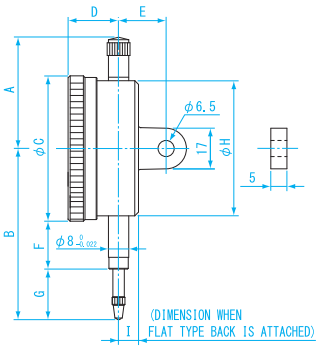

Units : mm

Model No.	A	B	C	D	E	F	G	H	I
DI-1058	43.5	68.5	58	16.5	19	18.5	21	53.5	8

Order No.	Model No.	Graduation (mm)	Measuring Range (mm)	Dial Reading (mm)	Backlash Error (μm)	Measuring Force less than (N)	1 Revolution (mm)	Indication Error 1/10 rev (μm)	Error over entire range (μm)	Repeatability (μm)	Weight
151504	DI-1058	0.01	0~10	±0-100	5	1.5	1	8	±20	5	180g

DIAL GAUGE STANDARD TYPE

T PDI 0

Standard dial gauge with carbide probe

Reference standard for comparative measurement ▶ Block Gauge P42 ~49
GO/NOGO judgment ▶ Limit Mark Sticker P247
Holding measuring instruments ▶ Magnetic Base P266 ~274
Precision measuring instrument holder ▶ Comparator Stand P282 ~283
Rust prevention ▶ Zerust Film for Steel P380

WDI-0558SP

USE
- Measuring surface flatness, checking tool set up, axial runout, checking squareness

MATERIAL
- Body: Aluminum, steel
- Probe: Carbide

FEATURES
- Graduation 0.01mm
- Limit indicator clips included
- O-Ring sealed between inner and outer lid to protect from water or oil
- Jeweled bearings
- Green scale plate
- Flat type back and center-lug back included
- Shock proof spindle mechanism protects the gear from abrupt motion

● DIMENSIONS

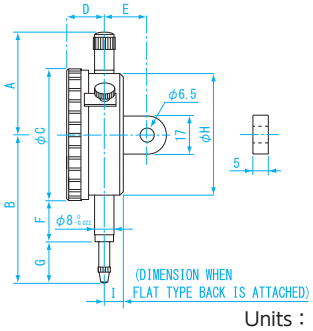

Units : mm

Model No.	A	B	C	D	E	F	G	H	I
WDI-0558SP	43.5	68.5	58	17	19	18.5	21	54	8
WDI-1058SP									

Order No.	Model No.	Graduation (mm)	Measuring Range (mm)	Dial Reading	Backlash Error (μm)	Measuring Force less than (N)	1 Revolution (mm)	Indication Error 1/10 rev (μm)	Error over entire range (μm)	Repeatability (μm)	Weight (including flat type back)
151912	WDI-0558SP	0.01	0~ 5	±0-100	3	1.5	1	8	±16	3	190g
151913	WDI-1058SP		0~10					10	±20		

DIAL GAUGE STANDARD TYPE

T PDI 0

Standard dial gauge graduation 0.001mm with carbide probe

Reference standard for comparative measurement ▶ Block Gauge P42 ~49
GO/NOGO judgment ▶ Limit Mark Sticker P247
Holding measuring instruments ▶ Magnetic Base P266 ~274
Precision measuring instrument holder ▶ Comparator Stand P282 ~283
Rust prevention ▶ Zerust Film for Steel P380

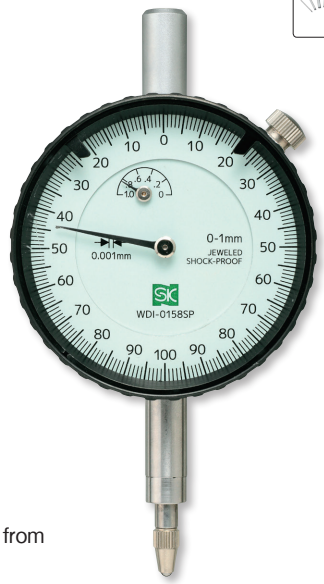

USE
- Measuring surface flatness, checking tool set up, axial runout, checking squareness

MATERIAL
- Body: Aluminum, steel
- Probe: Carbide

FEATURES
- Graduation 0.001mm
- Limit indicator clips included
- O-Ring sealed between inner and outer lid to protect from water or oil
- Jeweled bearings
- Green scale plate
- Flat type back and center-lug back included
- Shock proof spindle mechanism protects the gear from abrupt motion

● DIMENSIONS

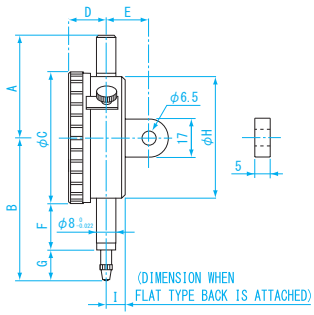

Units : mm

Model No.	A	B	C	D	E	F	G	H	I
WDI-0158SP	45	61.5	56	17	19	20	13.5	54	8

Order No.	Model No.	Graduation (mm)	Measuring Range (mm)	Dial Reading	Backlash Error (μm)	Measuring Force less than (N)	1 Revolution (mm)	Indication Error 1/10 rev (μm)	Error over entire range (μm)	Repeatability (μm)	Weight (including flat type back)
151911	WDI-0158SP	0.001	0~1	0-100-0	2	2	0.2	3	±5	0.3	190g

DIAL GAUGE LONG STROKE TYPE NEW!

T PDI 0

Suitable for adjusting ignition timing
and top dead center of car engine and others

Reference standard for comparative measurement ▶
Block Gauge P42 ~49

GO/NOGO judgment ▶
Limit Mark Sticker P247

Holding measuring instruments ▶
Magnetic Base P266 ~274

Precision measuring instrument holder ▶
Comparator Stand P282 ~283

Rust prevention ▶
Zerust Film for Steel P380

WDI-10078SP

WDI-8058SP

WDI-5058SP

WDI-3058SP

● DIMENSIONS

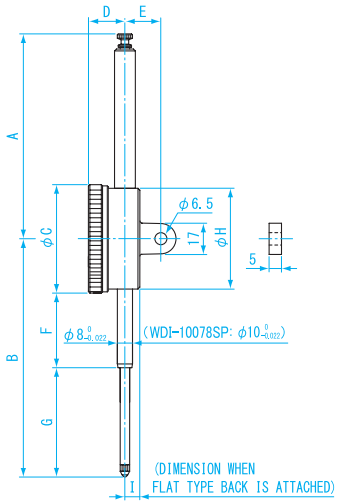

USE
- Long stroke measurement

MATERIAL
- Body&probe: Steel

FEATURES
- Limit indicator clips included
- Jeweled bearings
- White scale plate
- Flat type back and center-lug back included
- Shock proof spindle mechanism protects the gear rom abrupt motion

Units : mm

Model No.	A	B	C	D	E	F	G	H	I
WDI-3058SP	37.5	86.5	58	19	19.5	19.5	38	53.5	8.5
WDI-5058SP	108.5	126	58	19	19.5	39.5	57.5	53.5	8.5
WDI-8058SP	138.5	168.5	58	19	19.5	51.5	88	53.5	8.5
WDI-10078SP	167.5	208	78	20	20.5	61	108	69	10

※ For vertical measurements please keep measurement head above shaft

Order No.	Model No.	Graduation (mm)	Measuring Range (mm)	Dial Reading (mm)	Backlash Error (μm)	Measuring Force less than (N)	1 Revolution (mm)	Indication Error 1/10 rev (μm)	Error over entire range (μm)	Repeatability (μm)	Weight (including flat type back)
NEW! 151586	WDI-3058SP	0.01	0~ 30	0-100	7	3.0	1	14	±35	5	210g
NEW! 151587	WDI-5058SP		0~ 50		9	3.5		15	±40		270g
NEW! 151588	WDI-8058SP		0~ 80		11	4.0		–	±50	6	290g
NEW! 151589	WDI-10078SP		0~100		15	4.5		–			530g

DIAL GAUGE SMALL TYPE NEW!

Good performance and reasonable price

Reference standard for comparative measurement▶ Block Gauge P42 ~49
Holding measuring instruments▶ Magnetic Base P266 ~274
Precision measuring instrument holder▶ Comparator Stand P282 ~283
Rust prevention▶ Zerust Film for Steel P380

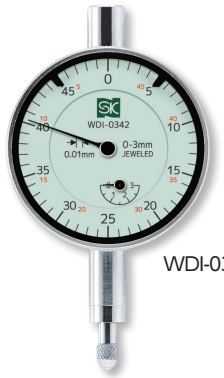
WDI-0342

WDI-0542

USE
- For multi-measurement or mounting to fixtures

MATERIAL
- Body: Aluminum, steel
- Probe: Steel

FEATURES
- Graduation 0.01mm, small size dial gauge
- Limit indicator clips included
- Jeweled bearings
- Green scale plate
- Flat type back and center-lug back included

● DIMENSIONS

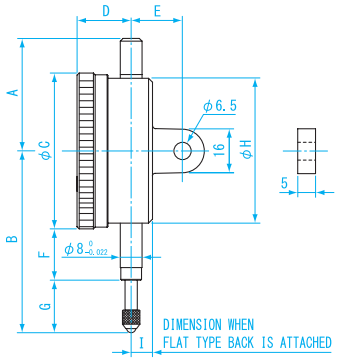

Units : mm

Model No.	A	B	C	D	E	F	G	H	I
WDI-0342	31	45	42	14	18	14	10	40	7
WDI-0542	31	47	42	14	18	14	12	40	7

Order No.	Model No.	Graduation (mm)	Measuring Range (mm)	Dial Reading (mm)	Backlash Error (μm)	Measuring Force less than (N)	1 Revolution (mm)	Indication Error 1/10 rev (μm)	Error over entire range (μm)	Repeatability (μm)	Weight (including flat type back)
NEW! 151512	WDI-0342	0.01	0~3	±0-50	6	1.5	0.5	8	±14	5	100g
NEW! 151513	WDI-0542		0~5					9	±16		

DIAL GAUGE REPLACEABLE TIP

Rust prevention▶ Zerust Film for Steel P380

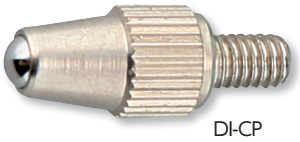
DI-CP

USE
- Dial gauge probe tip

MATERIAL
- Measurement tip: Steel ball (DI-CP·DI-CPK)
  Carbide (WDI-W)

● DIMENSIONS Units : mm

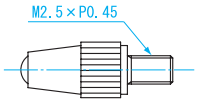

Compatibility Table

Model No.	Applicable Dial Indicator
DI-CP	WDI-10 DI-1058 WDI-3058SP WDI-5058SP WDI-8058SP WDI-10078SP WDI-0342 WDI-0542
	・Ex-model No. DI-3058 DI-5058 DI-8058 DI-10078 DI-0342 DI-0542 DI-1220A DI-1220AS DI-1102A DI-1810A
DI-CPK	DI-10KD
	・Ex-model No. DI-10 (Rev. since 2007) DI-1060SC DI-0560SC DI-0160SC
WDI-W	WDI-0158SP WDI-0558SP WDI-1058SP

Order No.	Model No.
151500	DI-CP
151675	DI-CPK
151914	WDI-W

DIAL GAUGE LIMIT MARK STICKER

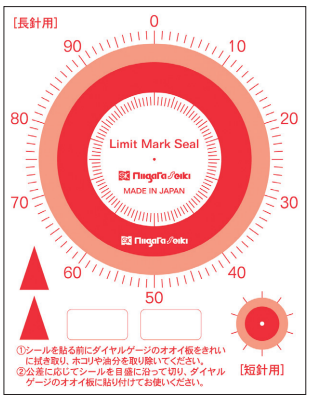

USE
- GO/NO GO judgment for diameter inspection

MATERIAL
- Pobick #100Rt-H (high strength, transparent, removable)

FEATURES
- Acceptable range is clearly visible. Ideal for inspection of mass produced parts.
- Includes arrow pointers for use with notes, indicating alert points, etc.

SPECIFICATIONS
- Applicable dial gauge: DIAL face more than φ52mm
- Sticker outside diameter: Long indicator ···φ51.5mm
  Short indicator ···φ10mm
- Contains 10 pcs

Order No.	Model No.	Quantity	Weight
151674	DI-LMS	10	20g

DIAL INDICATOR (0 ~ 0.2mm/Graduation0.002mm)

T PDI

HOW TO MOVIE

Suitable for surface flatness,
straightness and axial runout measurement in narrow area

Holding measuring instruments ▶ Height Gauge P196 ~200
Holding measuring instruments ▶ Magnetic Base P266 ~274
Rust prevention ▶ Zerust Film for Steel P380

WTI-2030S (Steel ball)

WTI-2030R (Ruby ball)

- High abrasion resistance
- Not electrically conductive
- Non-magnetic

WTI-2030W (Carbide ball)

- High abrasion resistance
- High hardness
- Low coefficient of thermal expansion

● DIMENSIONS

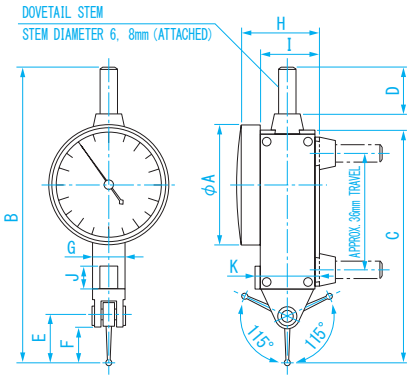

USE
- ● Lever type dial gauge

MATERIAL
- ●Body: Steel

FEATURES
- ●Compact with long reach for measuring in deep and confined spaces
- ●Jeweled bearings
- ●Green scale plate

Units : mm

Model No.	A	B	C	D	E	F	G	H	I	J	K
WTI-2030S WTI-2030R WTI-2030W	30	97	73	17	16	12	10	26	18.4	15	20
WTI-2038S WTI-2038R WTI-2038W	37.5									7	

Order No.	Model No.	Probe Material	Graduation (mm)	Measuring Range (mm)	Dial Reading	Error over entire range (μm)	Backlash Error (μm)	Measuring Force less than (N)	Adjacent Error (μm)	Repeatability (μm)	Weight
151921	WTI-2030S	Steel	0.002	0~0.2	0-100-0	6	2	Less than 0.5	4	1	70g
151922	WTI-2038S										80g
151925	WTI-2030R	Ruby									70g
151926	WTI-2038R										80g
151929	WTI-2030W	Carbide									70g
151930	WTI-2038W										80g

REPLACEABLE PROBE FOR DIAL INDICATOR

Replaceable probe for dial indicator

USE
- ●Replaceable probe for dial indicator

※ Requires calibration with standard after replacing probe

Order No.	Model No.	Probe Material	Model No. of applicable dial indicator
151933	WTI-20S	Steel	WTI-2030S WTI-2038S
151935	WTI-20R	Ruby	WTI-2030R WTI-2038R
151937	WTI-20W	Carbide	WTI-2030W WTI-2038W

WTI-20S

WTI-20R

WTI-20W

DIAL INDICATOR (0 ~ 0.8mm/Graduation 0.01mm)

T PDI

HOW TO MOVIE

Suitable for surface flatness,
straightness and axial runout measurement in narrow area

Holding measuring instruments ▶ Height Gauge P196 ~200
Holding measuring instruments ▶ Magnetic Base P266 ~274
Rust prevention ▶ Zerust Film for Steel P380

WTI-8030S (Steel ball)

WTI-8030R (Ruby ball)

- High abrasion resistance
- Not electrically conductive
- Non-magnetic

WTI-8030W (Carbide ball)

- High abrasion resistance
- High hardness
- Low coefficient of thermal expansion

● DIMENSIONS

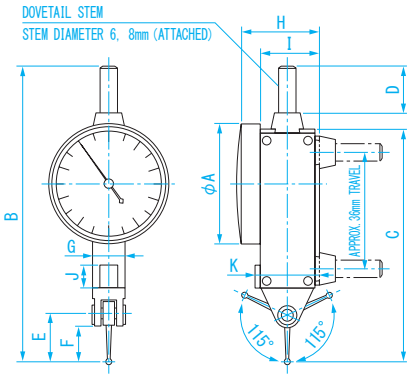

USE
- Lever type dial gauge

MATERIAL
- Body: Steel

FEATURES
- Compact with long reach for measuring in deep and confined spaces
- Jeweled bearings
- Green scale plate

Units : mm

Model No.	A	B	C	D	E	F	G	H	I	J	K
WTI-8030S WTI-8030R WTI-8030W	30	97	73	17	16.5	12.5	10	26	18.4	15	20
WTI-8038S WTI-8038R WTI-8038W	37.5									7	

Order No.	Model No.	Probe Material	Graduation (mm)	Measuring Range (mm)	Dial Reading	Error over entire range (μm)	Backlash Error (μm)	Measuring Force less than (N)	Adjacent Error (μm)	Repeatability (μm)	Weight
151923	WTI-8030S	Steel	0.01	0~0.8	0-40-0	13	3	Less than 0.5	10	3	70g
151924	WTI-8038S										80g
151927	WTI-8030R	Ruby									70g
151928	WTI-8038R										80g
151931	WTI-8030W	Carbide									70g
151932	WTI-8038W										80g

REPLACEABLE PROBE FOR DIAL INDICATOR

Replaceable probe for dial indicator

USE
- Replaceable probe for dial indicator

※ Requires calibration with standard after replacing probe

Order No.	Model No.	Probe Material	Model No. of applicable dial indicator
151934	WTI-80S	Steel	WTI-8030S WTI-8038S
151936	WTI-80R	Ruby	WTI-8030R WTI-8038R
151938	WTI-80W	Carbide	WTI-8030W WTI-8038W

WTI-80S

WTI-80R

WTI-80W

DIAL DEPTH GAUGE

T PDI 0

Wide measuring range for depth measurement

GO/NOGO judgment▶ Limit Mark Sticker P247

Rust prevention▶ Zerust Film for Steel P380

DD-1050

● DIMENSIONS

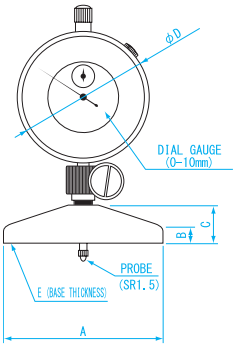

USE
- ●Depth measuring

MATERIAL
- ●Body&probe: Steel

FEATURES
- ●Includes multiple extension rods (10mm·20mm·40mm·60mm·80mm), combined up to 210mm depths can be measured

Units : mm

Model No.	A	B	C	D	E
DD-1050	50	7	18	60	16
DD-10100	100				

Order No.	Model No.	Graduation (mm)	Measuring Range (mm)	Error over entire range (μm)	Weight
151711	DD-1050	0.01	Depth: up to 210 Dial gauge: 10	±20	280g
151712	DD-10100				350g

DIGITAL THICKNESS GAUGE

T PDI 0

Digital type for easy reading

Rust prevention▶ Zerust Film for Steel P380

● DIMENSIONS Units : mm

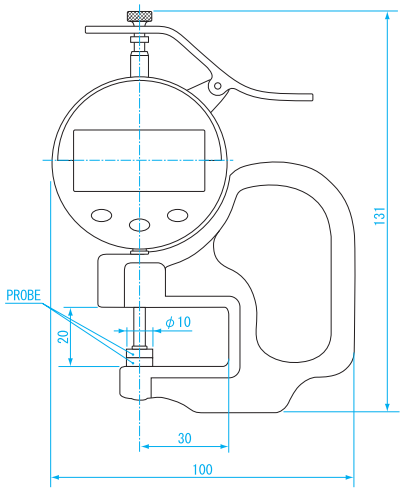

USE
- ●One touch thickness measurement of sheet material

MATERIAL
- ●Body: Steel
- ●Probe: Ceramic

FEATURES
- ●Digital display for easy reading
- ●Easy to operate for quick measurements
- ●Auto power off function (after approx. 5 min.)
- ●Display hold function

POWER
- ●One CR2032 (Lithium) battery included for testing

※ Quantization Error (± 1 digit) not included

Order No.	Model No.	Graduation (mm)	Measuring Range (mm)	Insert Depth (mm)	Accuracy※ (μm)	Measuring Faces	Weight
151720	DES-3010	0.01	0~10	30	±20	φ10mm Flat	180g

DIAL THICKNESS GAUGES

T PDI 0

Good performance and reasonable price

GO/NOGO judgment▶ Limit Mark Sticker P247

Rust prevention▶ Zerust Film for Steel P380

Example of mounting DSB-3010S

USE
- One touch thickness measurement of sheet material

MATERIAL
- Body: Steel
- Probe: Ceramic

FEATURES
- Easy to operate for quick measurements
- Shock proof spindle mechanism protects the gear from abrupt motion
- Dedicated base DSB-3010S sold separetely (for DS-3010S only)

● DIMENSIONS Units : mm

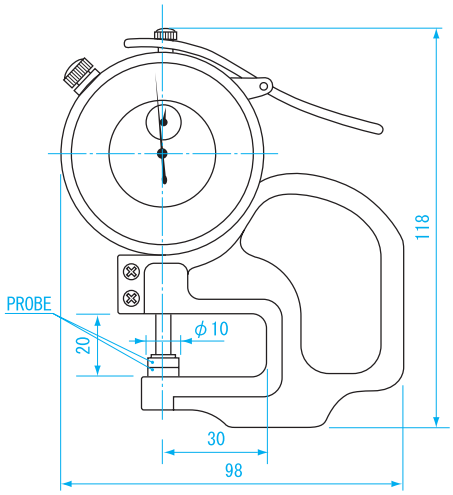

Order No.	Model No.	Graduation (mm)	Measurement Range (mm)	Insertion Depth (mm)	Accuracy (μm)	Measuring Faces	Weight
151680	DS-3010S	0.01	0~10	30	±20	ϕ10mm Flat	200g

■ Dial thickness gauge dedicated base

Order No.	Model No.	Weight
151685	DSB-3010S	370g

DIAL THICKNESS GAUGES

T PDI 0

Good performance and reasonable price

GO/NOGO judgment▶ Limit Mark Sticker P247

Rust prevention▶ Zerust Film for Steel P380

● DIMENSIONS Units : mm

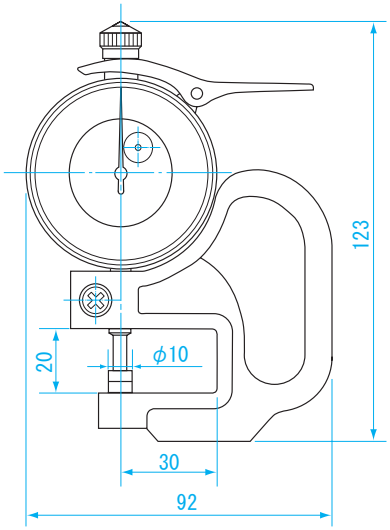

USE
- One touch thickness measurement of sheet metal

MATERIAL
- Body&probe: Steel

FEATURES
- Easy to operate for a quick measurement

Order No.	Model No.	Graduation (mm)	Measurement Range (mm)	Insertion Depth (mm)	Accuracy (μm)	Measuring Faces (mm)	Weight
151532	DS-1211	0.01	0~10	30	±20	ϕ10mm Flat	260g

DIGITAL BORE GAUGE NEW!

Digital gauge included.
Good performance and reasonable price.

Zero pint setting▶ Ring Gauge P68 ~72
Replacement parts▶ Parts for Bore Gauge P257
Rust prevention▶ Zerust Film for Steel P380

Digital indicator included

WCDI-6D

WCDI-10D

WCDI-6D Measuring Head
[Two point measurement]

WCDI-10D Measuring Head

● DIMENSIONS・PARTS NAME Units : mm

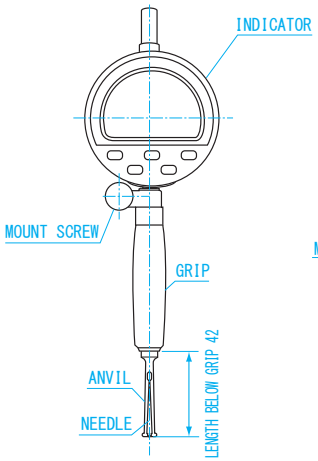

WCDI-6D

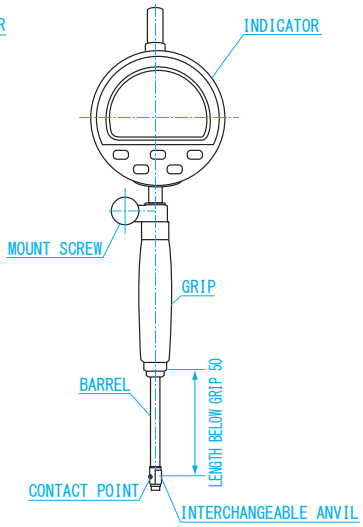

WCDI-10D

USE
●Bore measurement
MATERIAL
●Body: Steel
FEATURES
●Digital indicator included
●Digital display for easy reading
POWER
●One CR2032 (Lithium) battery included for testing

Parts for Bore Gauge⇒P257

※ Quantization Error (± 1 digit) not included
＊ Including attached digital gauge

Order No.	Model No.	Weight
NEW! 151868	WCDI-6D	255g
NEW! 151869	WCDI-10D	265g

Resolution (mm)	Measuring Range (mm)	Error over Entire Range* (μm)*	Adjacent Error* (μm)*	Repeatability* (μm)*	Effective Stroke of Contact Point (mm)	Interchangeable Anvil	Measuring Head	Interchangeable Washer
0.002	4~ 6	10	5	3	0.6	-	[Two point measurement] 4pcs (0.5mm step)	None
	6~10	12			0.7	9 pcs (0.5mm step)	-	None

DIGITAL BORE GAUGE NEW!

T PDI 0

Digital gauge included.
Good performance and reasonable price.

Zero pint setting▶ Ring Gauge P68 ~72
Replacement parts▶ Parts for Bore Gauge P257
Rust prevention▶ Zerust Film for Steel P380

Digital indicator included

WCDI-18D

WCDI-35D

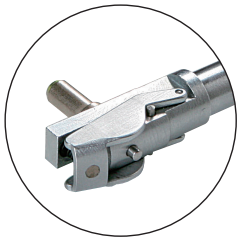

WCDI-18D
Measuring Head

WCDI-35D
Measuring Head

USE
- Bore measurement

MATERIAL
- Body: Steel

FEATURES
- Digital indicator included
- Digital display for easy reading

POWER
- One CR2032 (Lithium) battery included for testing

Parts for Bore Gauge⇒P257

● DIMENSIONS・PARTS NAME Units : mm

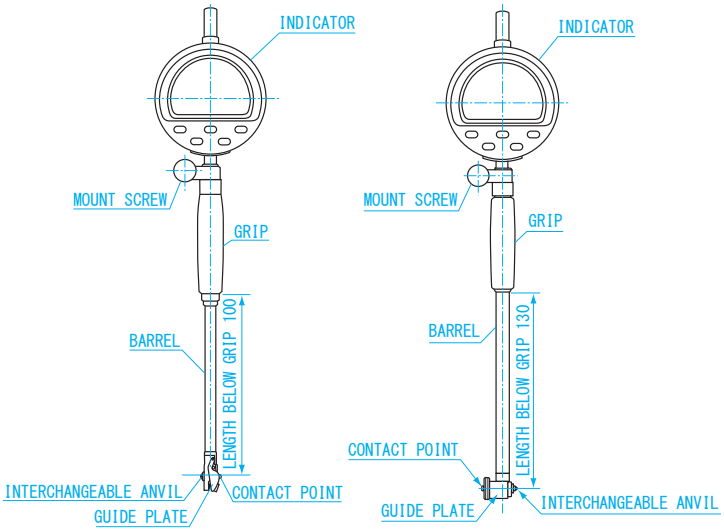

WCDI-18D WCDI-35D

※ Quantization Error (± 1 digit) not included
＊ Including attached digital gauge

Order No.	Model No.	Weight
NEW! 151870	WCDI-18D	300g
NEW! 151871	WCDI-35D	360g

Resolution (mm)	Measuring Range (mm)	Error over Entire Range* (μm)*	Adjacent Error* (μm)*	Repeatability* (μm)*	Effective Stroke of Contact Point (mm)	Interchangeable Anvil	Interchangeable Washer
0.002	10~18	12	5	3	0.9	9 pcs (1.0mm step)	None
	18~35	15			1.2	9 pcs (2.0mm step)	None

DIGITAL BORE GAUGE NEW!

Digital gauge included.
Good performance and reasonable price.

Zero pint setting▶ Ring Gauge P68 ~72
Replacement parts▶ Parts for Bore Gauge P257
Rust prevention▶ Zerust Film for Steel P380

Digital indicator included

WCDI-160D

Measuring Head

● DIMENSIONS・PARTS NAME Units : mm

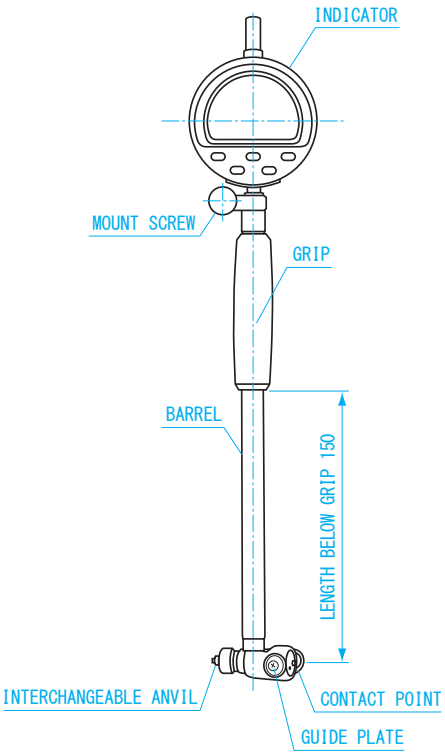

USE
●Bore measurement
MATERIAL
●Body: Steel
FEATURES
●Digital indicator included
●Digital display for easy reading
POWER
●One CR2032 (Lithium) battery included for testing

Parts for Bore Gauge⇒P257

※ Quantization Error (± 1 digit) not included
＊ Including attached digital gauge

Order No.	Model No.	Weight
NEW! 151872	WCDI-50D	450g
NEW! 151873	WCDI-100D	475g
NEW! 151874	WCDI-160D	570g

Resolution (mm)	Measuring Range (mm)	Error over Entire Range※ (μm)＊	Adjacent Error※ (μm)＊	Repeatability※ (μm)＊	Effective Stroke of Contact Point (mm)	Interchangeable Anvil	Interchangeable Washer
0.002	35~ 50	15	5	3	1.2	4 pcs (5.0mm step)	0.5・1・2・3mm 1 pc each
	50~100	18	6		1.6	11 pcs (5.0mm step)	
	50~160					12 pcs (5.0mm step) 1 pc Extentional anvil	

DIAL BORE GAUGE NEW!

Dial gauge included.
Good performance and reasonable price.

Zero pint setting▶ Ring Gauge P68 ~72
Replacement parts▶ Parts for Bore Gauge P257
Rust prevention▶ Zerust Film for Steel P380

Dial gauge included

WCDI-6

WCDI-10

WCDI-6 Measuring Head
[Two point measurement]

WCDI-10 Measuring Head

● DIMENSIONS・PARTS NAME Units : mm

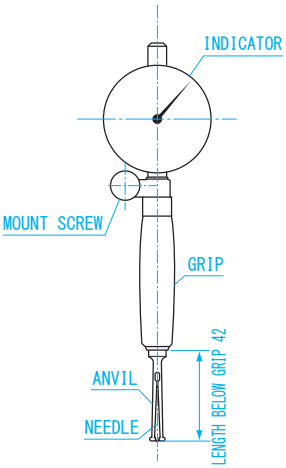

WCDI-6

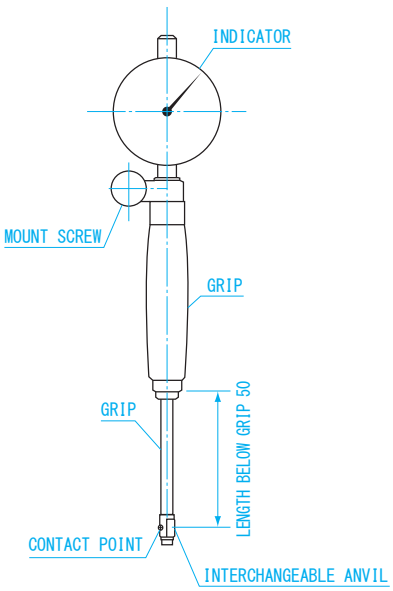

WCDI-10

USE
●Bore measurement
MATERIAL
●Body: Steel
FEATURES
●Dial gauge included

Parts for Bore Gauge⇒P257

＊ Including attached dial gauge

Order No.	Model No.	Weight
NEW! 151861	WCDI-6	175g
NEW! 151862	WCDI-10	180g

Resolution (mm)	Measuring Range (mm)	Error over Entire Range (μm)＊	Adjacent Error (μm)＊	Repeatability (μm)＊	Effective Stroke of Contact Point (mm)	Interchangeable Anvil	Measuring Head	Interchangeable Washer
0.01	4~6	10	5	3	0.6	-	[Two point measurement] 4 pcs (0.5mm step)	None
0.01	6~10	12			0.7	9 pcs (0.5mm step)	-	None

DIAL BORE GAUGE NEW!

Dial gauge included.
Good performance and reasonable price.

Zero pint setting▶ Ring Gauge P68～72
Replacement parts▶ Parts for Bore Gauge P257
Rust prevention▶ Zerust Film for Steel P380

Dial gauge included

WCDI-18

WCDI-35

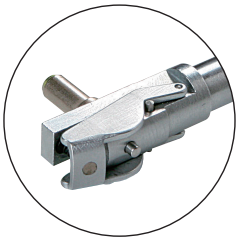

WCDI-18
Measuring Head

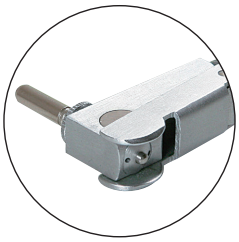

WCDI-35
Measuring Head

USE
- Bore measurement

MATERIAL
- Body: Steel

FEATURES
- Dial gauge included

Parts for Bore Gauge⇒P257

● DIMENSIONS・PARTS NAME Units : mm

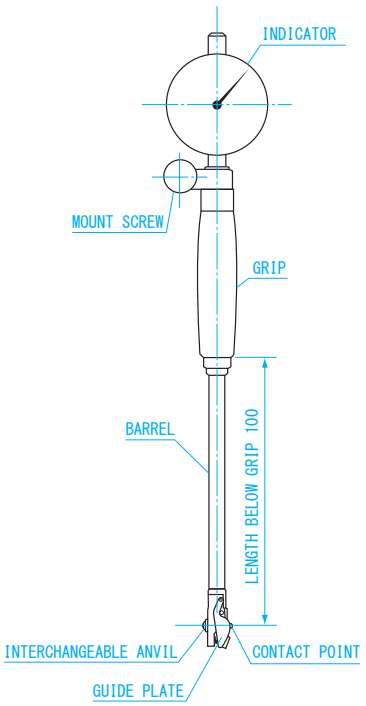

WCDI-18

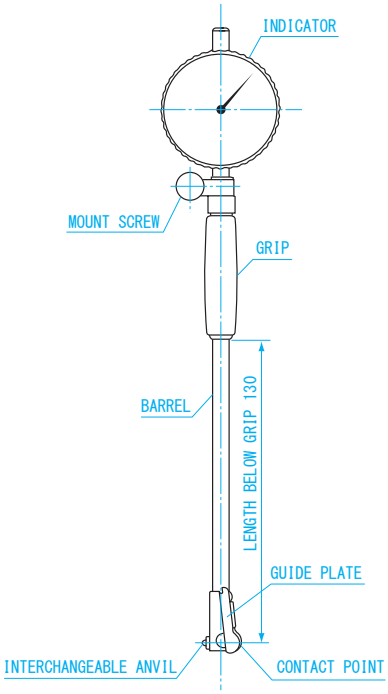

WCDI-35

＊ Including attached dial gauge

Order No.	Model No.	Weight
NEW! 151863	WCDI-18	195g
NEW! 151864	WCDI-35	300g

Resolution (mm)	Measuring Range (mm)	Error over Entire Range (μm)＊	Adjacent Error (μm)＊	Repeatability (μm)＊	Effective Stroke of Contact Point (mm)	Interchangeable Anvil	Interchangeable Washer
0.01	10～18	12	5	3	0.9	9 pcs (1.0mm step)	0.5mm 1 pc
0.01	18～35	15			1.0	7 pcs (2.5mm step)	None

DIAL BORE GAUGE NEW!

T PDI 0

Dial gauge included.
Good performance and reasonable price.

Dial gauge included

Measuring Head

USE
- Bore measurement

MATERIAL
- Body: Steel

FEATURES
- Dial gauge included

Parts for Bore Gauge⇒P257

● DIMENSIONS・PARTS NAME

Units : mm

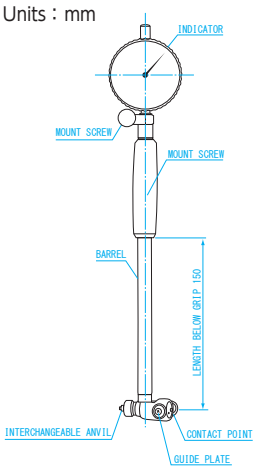

Zero pint setting▶
Ring Gauge
P68 ~72

Replacement parts▶
Parts for Bore Gauge
P257

Rust prevention▶
Zerust Film for Steel
P380

＊ Including attached dial gauge

Order No.	Model No.	Weight
NEW! 151865	WCDI-50	440g
NEW! 151866	WCDI-100	465g
NEW! 151867	WCDI-160	540g

Resolution (mm)	Measuring Range (mm)	Error over Entire Range (μm)＊	Adjacent Error (μm)＊	Repeatability (μm)＊	Effective Stroke of Contact Point (mm)	Interchangeable Anvil	Interchangeable Washer
0.01	35～ 50	15	5	3	1.2	4 pcs (5.0mm step)	0.5・1・2・3mm 1 pc each
0.01	50～100	18	6		1.6	11 pcs (5.0mm step)	
0.01	50～160					12 pcs (5.0mm step) 1 pc sub anvil	

PARTS FOR BORE GAUGE

0

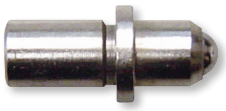

Rust prevention▶
Zerust Film for Steel
P380

■ INTERCHANGEABLE ANVIL

Order No.	Model No.	Size (mm)	applicable Model No.
151600	AC-1060	6.0	WCDI-10D WCDI-10 ・Ex-model No. CDI-10D CDI-10
151601	AC-1065	6.5	
151602	AC-1070	7.0	
151603	AC-1075	7.5	
151604	AC-1080	8.0	
151605	AC-1085	8.5	
151606	AC-1090	9.0	
151607	AC-1095	9.5	
151608	AC-10100	10.0	
151609	AC-1810	10.0	WCDI-18D WCDI-18 ・Ex-model No. CDI-18D CDI-18
151610	AC-1811	11.0	
151611	AC-1812	12.0	
151612	AC-1813	13.0	
151613	AC-1814	14.0	
151614	AC-1815	15.0	
151615	AC-1816	16.0	
151616	AC-1817	17.0	
151617	AC-1818	18.0	
151641	AC-35180D	18.0	WCDI-35D ・Ex-model No. CDI-35D
151642	AC-35200D	20.0	
151643	AC-35220D	22.0	
151644	AC-35240D	24.0	
151645	AC-35260D	26.0	
151646	AC-35280D	28.0	
151647	AC-35300D	30.0	
151648	AC-35320D	32.0	
151649	AC-35340D	34.0	
151618	AC-35180	18.0	WCDI-35 ・Ex-model No. CDI-35
151619	AC-35205	20.5	
151620	AC-35230	23.0	
151621	AC-35255	25.5	
151622	AC-35280	28.0	
151623	AC-35305	30.5	
151624	AC-35330	33.0	

■ INTERCHANGEABLE ANVIL

Order No.	Model No.	Size (mm)	applicable Model No.
151625	AC-5035	35.0	WCDI-50D WCDI-50 ・Ex-model No. CDI-50D CDI-50
151626	AC-5040	40.0	
151627	AC-5045	45.0	
151628	AC-5050	50.0	
151629	AC-10050	50.0	WCDI-100D WCDI-160D WCDI-100 WCDI-160 ・Ex-model No. CDI-100D CDI-160D CDI-100 CDI-160
151630	AC-10055	55.0	
151631	AC-10060	60.0	
151632	AC-10065	65.0	
151633	AC-10070	70.0	
151634	AC-10075	75.0	
151635	AC-10080	80.0	
151636	AC-10085	85.0	
151637	AC-10090	90.0	
151638	AC-10095	95.0	
151639	AC-16100	100.0	
151640	AC-16105	105.0	

■ EXTENTIONAL ANVIL

Order No.	Model No.	Size (mm)	applicable Model No.
151650	ALC-55	55.0	WCDI-160D WCDI-160 ・Ex-model No. CDI-160D CDI-160

■ WASHERS

Order No.	Model No.	Size (mm)	applicable Model No.
151660	W-1805	0.5	WCDI-18 WCDI-18D ・Ex-model No. CDI-18 CDI-18D
151661	W-5005	0.5	WCDI-35D ・Ex-model No. CDI-35D WCDI-50 WCDI-100 WCDI-160 WCDI-50D WCDI-100D WCDI-160D ・Ex-model No. CDI-50 CDI-100 CDI-160 CDI-50D CDI-100D CDI-160D
151662	W-5010	1.0	
151663	W-5020	2.0	
151664	W-5030	3.0	

DIAL CALIPER GAUGE (OUTSIDE)

For high accuracy O.D. measurement

Reference standard for comparative measurement ▶
Block Gauge P42 ~49

Rust prevention ▶
Zerust Film for Steel P380

AO TYPE

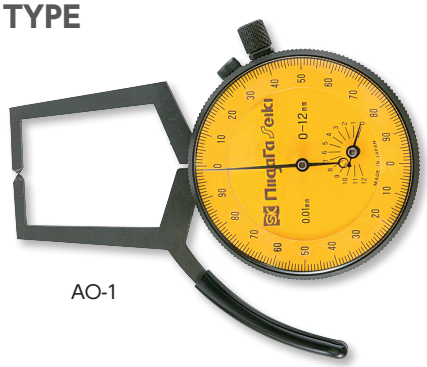

AO-1

BO TYPE

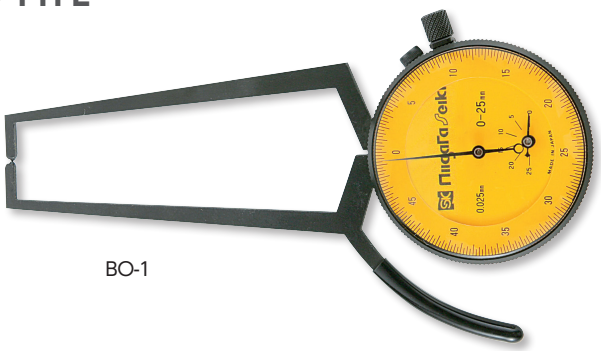

BO-1

Measurement Example

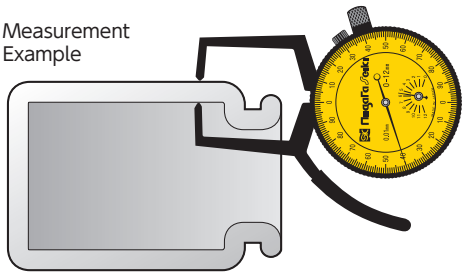

Measurement Example

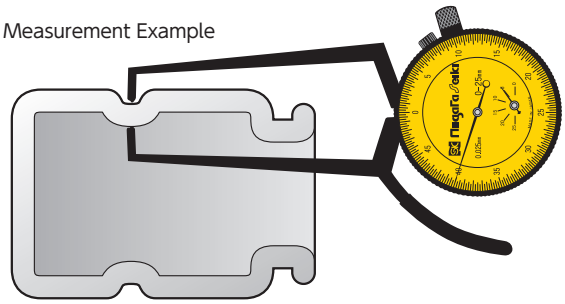

● DIMENSIONS

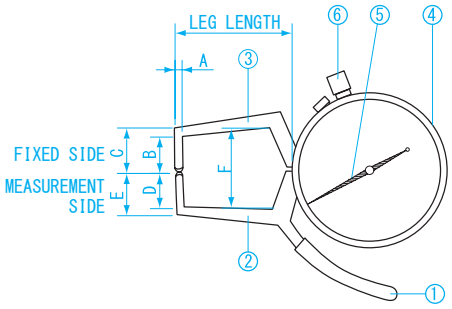

① PUSH BUTTON (AO-1 IS LEVER TYPE)
② MOVING ARM
③ FIXED ARM
④ BEZEL (RING)
⑤ LIMIT INDICATOR
⑥ CLAMP

Units : mm

Model No.	Leg Length ※1	A	B	C	D	E	F
AO-1	(40)	2.3	11.5	14.5	11.5	14.5	27
AO-2	(42)		18.5	20.5			45
AO-3			8.5	10.5			49
BO-1	(85)				8.5	10.5	27.5
BO-2	(86)						46.5
BO-3	(89)						55.5

※ Gauge head : ϕ 1.6mm ball
※1 Reference value only

USE
●For external measurement
MATERIAL
●Body: Steel
FEATURES
●Ideal for measuring O.D. and wall thickness

※ Custom shape product available by special order

Order No.	Model No.	Graduation (mm)	Measuring Range (mm)	Accuracy (mm)	Repeatability (mm)	Weight
151561	AO-1	0.01	0~12	±0.04	±0.04	80g
151562	AO-2		10~22			83g
151563	AO-3		20~32			85g
151571	BO-1	0.025	0~25	±0.075	±0.075	80g
151572	BO-2		10~35			83g
151573	BO-3		20~45			85g

DIAL GAUGE
DIAL INDICATOR
THICKNESS GAUGE
BORE GAUGE
CALIPER GAUGE
HARDNESS・TENSION・FILM THICKNESS
MAGNETIC BASE

DIAL CALIPER GAUGE (INSIDE)

For high accuracy I.D. measurement

Reference standard for calibration▶ Ring Gauge P68 ~72

Rust prevention▶ Zerust Film for Steel P380

AI TYPE

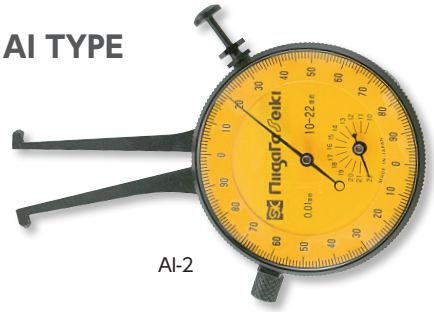

AI-2

Measurement Example

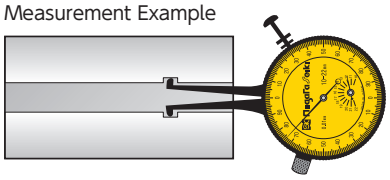

BI TYPE

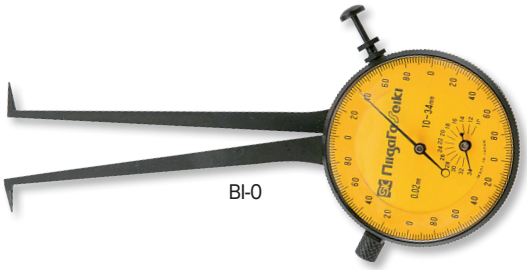

BI-0

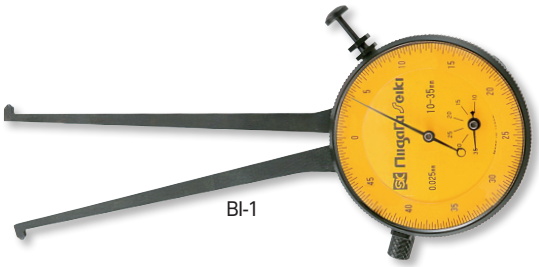

BI-1

Measurement Example

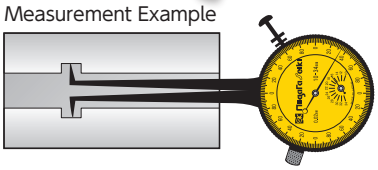

● DIMENSIONS

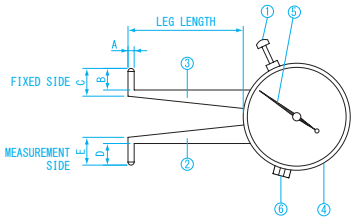

①PUSH BUTTON
②MOVING ARM
③FIXED ARM
④BEZEL (RING)
⑤LIMIT INDICATOR
⑥CLAMP

Units : mm

Model No.	Leg Length ※1	A	B	C	D	E
AI-0	(41)	2.3	1.1	2.8	1.1	2.8
AI-1	(40)					
AI-2			2.7	4.5	2.3	4.8
AI-3	(42)		8	11	4.4	6.7
AI-4	(43)		18	21		
AI-5	(44)		28	31		
BI-0	(85)	Tip 0.5	7	9	7	9
BI-1		2.3	2.6	4.6	2.6	4.6
BI-2			5.1	7.1	4.8	6.8
BI-3	(88)		7.5	10	8.6	10.6
BI-4	(89)		17.5	20		
BI-5	(90)		27.5	30		

※1 Reference value only

USE
- For internal measurement

MATERIAL
- Body: Steel

FEATURES
- Ideal for measuring bore size and I.D. of irregular parts

※ Custom shape product available by special order

Order No.	Model No.	Graduation (mm)	Measuring Range (mm)	Accuracy (mm)	Repeatability (mm)	Weight
151540	AI-0	0.01	3~ 9	±0.04	±0.04	75g
151541	AI-1		6~18			75g
151542	AI-2		10~22			80g
151543	AI-3		20~32			73g
151544	AI-4		30~42			85g
151545	AI-5		40~52			88g
151550	BI-0	0.02	10~34	±0.06	±0.06	80g
151551	BI-1	0.025	10~35	±0.075	±0.075	83g
151552	BI-2		20~45			85g
151553	BI-3		30~55			88g
151554	BI-4		40~65			90g
151555	BI-5		50~75			93g

DIGITAL CALIPER GAUGE

T PDI 0

Wide measuring range of 0～150mm

Reference standard for comparative measurement▶ Block Gauge P42～49
Rust prevention▶ Zerust Film for Steel P380

USE
- For external measurement

MATERIAL
- Body: Steel, plastic

FEATURES
- Digital display for easy reading
- Wide measuring range of 0～150mm

POWER
- One CR2032 (Lithium) battery included for testing

● DIMENSIONS Units : mm

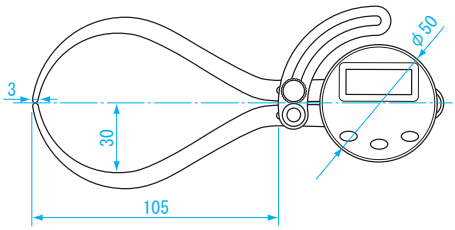

※ Quantization Error (± 1 digit) not included

Order No.	Model No.	Resolution (mm)	Measuring Range (mm)	Accuracy※ (mm)	Weight
152053	EDC-A1150	0.1	0-150	±0.2	140g

DIGITAL CALIPER GAUGE

T PDI 0

Ideal for quick thickness measurement of small parts and tubes

Reference standard for comparative measurement▶ Block Gauge P42～49
Rust prevention▶ Zerust Film for Steel P380

EDC-A125

EDC-A225

● DIMENSIONS Units : mm

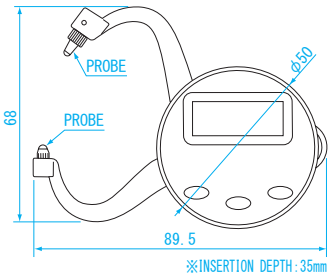

EDC-A125

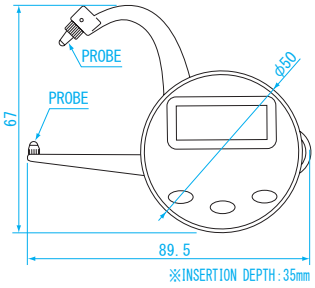

EDC-A225

USE
- For external measurement

MATERIAL
- Body: Steel, plastic

FEATURES
- Easy to read digital display
- Display hold function,
  Auto power off function (after approx. 2 min.)

POWER
- One CR2032 (Lithium) battery included for testing

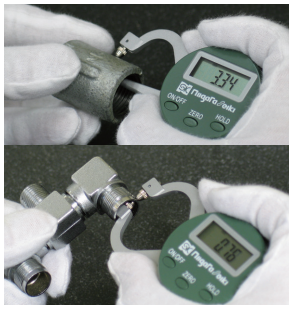

※ Quantization Error (± 1 digit) not included

Order No.	Model No.	Resolution (mm)	Measuring Range (mm)	Accuracy※ (mm)	Measuring Face	Weight
152051	EDC-A125	0.02	0-25	0.00～ 5.00mm: ±0.04 5.02～25.00mm: ±0.08	Round (φ2.5mm)	105g
152052	EDC-A225					90g

DIAL CALIPER GAUGE

T PDI 0

Ideal for measuring tube and fitting thickness

Reference standard for comparative measurement ▶ Block Gauge P42 ~49

Rust prevention ▶ Zerust Film for Steel P380

DCG-MA1

DCG-MA2

USE
- For external measurement

MATERIAL
- Body: Steel (silver finish)

FEATURES
- Convenient portable size
- Round probe tip for measuring irregular shapes

● DIMENSIONS Units : mm

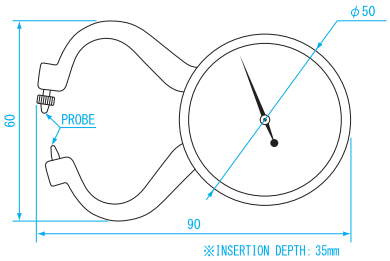

DCG-MA1

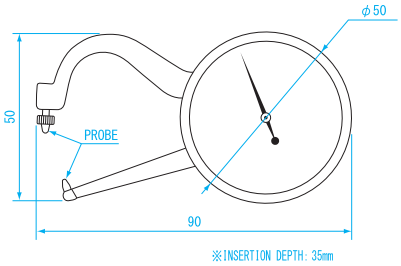

DCG-MA2

Order No.	Model No.	Graduation (mm)	Measuring Range (mm)	Accuracy (mm)	Measuring Face	Weight
151581	DCG-MA1	0.05	0~10	±0.1	Round(φ2mm)	75g
151582	DCG-MA2					

DIAL CALIPER GAUGE

T PDI 0

Ideal for measuring tube and fitting thickness

Reference standard for comparative measurement ▶ Block Gauge P42 ~49

Rust prevention ▶ Zerust Film for Steel P380

DCG-MA115

DCG-MA215

USE
- For external measurement

MATERIAL
- Body: Steel (silver finish)

FEATURES
- Convenient portable size
- Round probe tip for measuring irregular shapes

● DIMENSIONS Units : mm

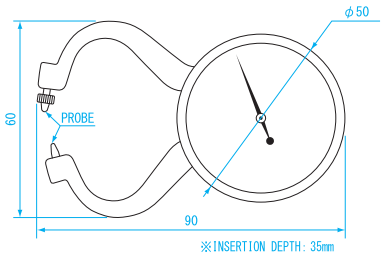

DCG-MA115

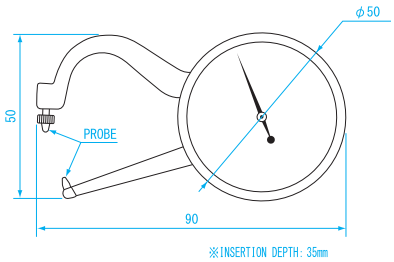

DCG-MA215

Order No.	Model No.	Graduation (mm)	Measuring Range (mm)	Accuracy (mm)	Measuring Face	Weight
151575	DCG-MA115	0.05	0~15	±0.1	Round (φ2mm)	75g
151576	DCG-MA215					

DIAL CALIPER GAUGE

T PDI 0

Ideal for measuring papers, thin materials and small parts

Reference standard for comparative measurement▶ Block Gauge P42 ~49
Rust prevention▶ Zerust Film for Steel P380

USE
- For external measurement

MATERIAL
- Body: Steel (silver finish)

FEATURES
- Convenient portable size
- Flat probe surface for sheet metal thickness measurement

● DIMENSIONS Units : mm

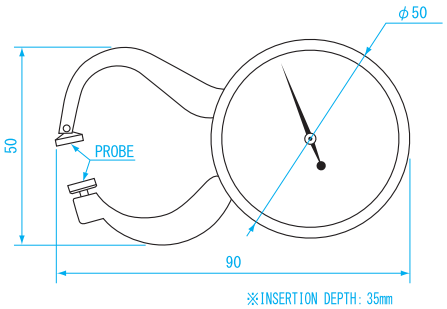

Order No.	Model No.	Graduation (mm)	Measuring Range (mm)	Accuracy (mm)	Measuring Face	Weight
151585	DCG-MG1	0.05	0~10	±0.1	Flat (φ7mm)	75g

DIAL CALIPER GAUGE

T PDI 0

Ideal for measuring small parts. Spherical measuring type.

Reference standard for comparative measurement▶ Block Gauge P42 ~49
Rust prevention▶ Zerust Film for Steel P380

USE
- For external measurement

MATERIAL
- Body: Steel (silver finish)

FEATURES
- Convenient portable size
- Pointed measuring face fits into tight spots

● DIMENSIONS Units : mm

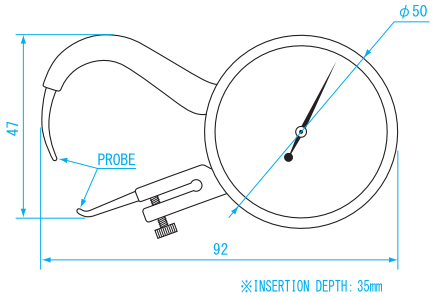

Order No.	Model No.	Graduation (mm)	Measuring Range (mm)	Accuracy (mm)	Measuring Face	Weight
151583	DCG-MP1	0.05	0~10	±0.1	Pointed (φ1mm)	75g

DUROMETER

Measure hardness of rubber or plastic. Conforms to JIS, ISO standards.

Stand to provide stable measurement ▶ Durometer Stand P263
Rust prevention ▶ Zerust Film for Steel P380

ADM-A

USE
- Checking hardness of material such as rubber or plastic

MATERIAL
- Body: Aluminum
- Presser foot: HM35 (SKH55) tool steel

FEATURES
- Presser foot geometry and spring force in compliance with the following standards:
- JIS K 6253-3: 2012
  (Rubber, vulcanized or thermoplastic -- Determination of hardness)
- ISO 7619-1: 2010

ACCESSORIES
- Block to check wear (ADM-A, ADM-D)

Model No.	ADM-A	ADM-D	ADM-E
Hardness Range	A20 ~ A90	Greater than A90	Less than A20
Material for test	Rubber, Soft plastic, Tires, Medium hardness elastomers	Hard rubber, Plastic, Ebonite rubber, High hardness elastomers	Soft rubber, Eraser, Roll film, Low hardness elastomers
Specimen thickness	6.0mm or greater	6.0mm or greater	10.0mm or greater
Display accuracy	± 1 gradation		

Order No.	Model No.	Weight
151721	ADM-A	160g
151722	ADM-D	160g
151723	ADM-E	170g

DUROMETER STAND

Stand to provide stable measurements for durometer testing

● DIMENSIONS Units : mm

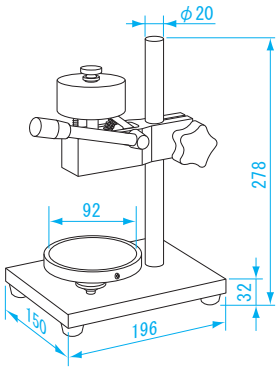

DMS-AE

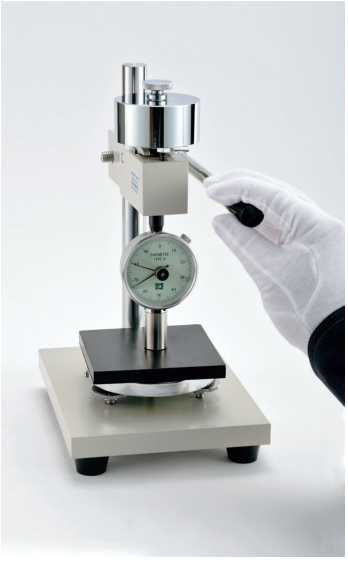

USE
- Stand for holding durometer

MATERIAL
- Stem&weight: Iron
- Base: Cast iron

FEATURES
- When durometer is attached, provides constant pressure for consistent measurements

Order No.	Model No.	Applicable Durometer	Weight
151713	DMS-AE	ADM-A, ADM-E	5.5kg
151714	DMS-D	ADM-D	9.5kg

LEEB HARDNESS TESTER

Portable hardness tester for measuring hardness of metals.
Automatic angle correction function enables to measure full 360°.

LHT-400

LHT-DL-S

USE
- Measuring hardness of metal

MATERIAL
- Body: ABS resin
- Probe: Tungsten (hardness HV 1600)

FEATURES
- For general metal hardness testing.
  Wide measuring range which is especially suitable for testing hardness of large objects.
- Can be converted to display in any of 7 hardness scale-HRC, HV, HL, HRB, HS, HB and σB
- Average can be automatically calculated for between 2 to 8 measurements
- Measured value recorded can be easily edited on the computer by connecting the USB cable

SPECIFICATIONS
- Material for test: ·Steel, cast steel ·Alloy tool steel ·Stainless steel, high temperature steel ·Cast iron ·Ductile iron ·Aluminum alloy ·Brass ·Bronze ·Copper

ACCESSORIES
- Master block ● AC adapter ● USB cable ● Cleaning brush ● Measuring ring (small)

POWER
- AC adapter rechargeable battery

● DIMENSIONS Units : mm

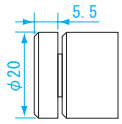

PROBE (LHT-400)

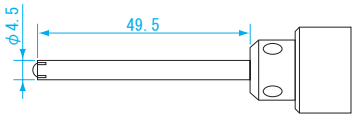

DL TYPE PROBE (LHT-DL-S)

Order No.	Model No.	Measuring Range	Accuracy	Weight
151753	LHT-400	Min. 174~Max. 900HL	Within ±17HL	97g

■ DL TYPE PROBE (separately sold) : Suitable for measuring hardness in narrow space such as bottom of groove or in a large gear

Order No.	Model No.	Weight
151754	LHT-DL-S	25g

DIAL TENSION GAUGE

PDI

Measures button pressing force and spring tension

Rust prevention▶
Zerust Film for Steel
P380

DITG-50PJ

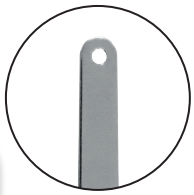

Measuring head

USE
- Measuring button pressing force and spring tension

MATERIAL
- Main body: ABS ●Measuring head: Steel

FEATURES
- Peak indicator type for easily reading peak force

● DIMENSIONS Units : mm

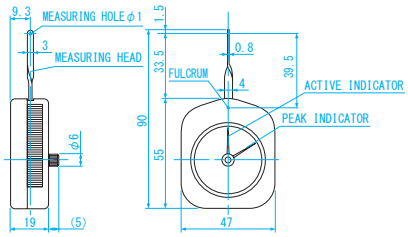

Order No.	Model No.	Range	Resolution	Accuracy	Reading	Weight
151525	DITG-30PJ	30 ~ 300mN	10mN	± 0.5 graduation	30-300-30	55g
151526	DITG-50PJ	0.06 ~ 0.5N	0.02N		0.06-0.5-0.06	
151527	DITG-100PJ	0.1 ~ 1N	0.05N		0.1-1-0.1	
151528	DITG-150PJ	0.15 ~ 1.5N	0.05N		0.15-1.5-0.15	
151529	DITG-300PJ	0.3 ~ 3N	0.1N		0.3-3-0.3	
151530	DITG-500PJ	0.6 ~ 5N	0.2N		0.6-5-0.6	

FILM THICKNESS METER FOR Fe AND NON-Fe MATERIALS

Compact and lightweight for coating thickness measurement.
Can rotate 90° for measuring tight spaces such as inside pipe.

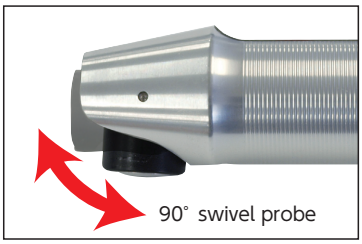

FTM-52FN FTM-50FE

Model No.	Measurable basis material	Measurable coating material
FTM-50FE for Fe materials	● Ferrous material thickness more than 300μm (Magnetic material such as iron except nickel)	● Measurable max. 5.0mm of all kind of non-magnetic coating on ferrous material (paints, varnish, synthetic coating, enamel, rubber, ceramic, zinc plating and etc.)
FTM-52FN for Fe&Non-Fe materials	● Ferrous material thickness more than 300μm (Magnetic material such as iron except nickel) ● Non-ferrous material thickness more than 50μm (Conductive material such as aluminum, brass, bronze, zinc, lead, copper etc.)	● Measurable max. 5.0mm of all kind of non-magnetic coating on ferrous material (paints, varnish, synthetic coating, enamel, rubber, ceramic, zinc plating and etc.) ● Measurable max. 2.0mm of non-conductive coating on non-ferrous material (paints, varnish, synthetic coating, almite, rubber and etc.)

USE
- Thickness measurement of coated surface

MATERIAL
- Probe: Ruby

FEATURES
- Automatically determines the object to be measured
- Probe rotates and it allows to measure inside of pipe or measure a part that is difficult to measure
- It can be easily operated with one hand at high places and narrow places
- Auto power off function.

SPECIFICATIONS
- Accuracy…Under 300μm: ±2μm
  300~1000μm: ±1%
  1000~2000μm: ±3%
  2000μm or over: ±5%

POWER
- One AA battery (not included)

● DIMENSIONS Units : mm

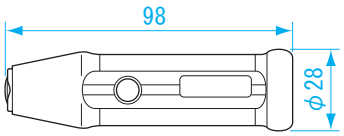

Order No.	Model No.	Measurement Method	Measuring Range (μm)	Resolution	Weight
152081	FTM-50FE	Electromagnetic Induction	Fe materials: 0 ~ 5000	Under 100μm: 0.1μm Under 1000μm: 1μm 1.00mm or over: 0.01mm	72g
152082	FTM-52FN	Dual Type (Eddy Current/Electromagnetic Induction)	Fe materials: 0 ~ 5000 Non-Fe materials: 0 ~ 2000		

■ MAGNETIC BASE LIST

Product Photo				
Order No.	012870	012871	012873	012874
Product Name	Magnetic Base Standard Type	Magnetic Base Fine Adjustment Type	Magnetic Base Thick Main Post Type	Magnetic Base Flexible Post Type
Model No.	SB-6C	SB-6B	SB-80P	SB-80F
Features	Standard	Fine adjustment for easy position setting	Stable holding is possible	It post can be bent frexibly
Holder Size	ϕ6mm Stem / ϕ8mm Stem / ϕ6.5mm & ϕ8mm Lug back dial gauge			ϕ6mm / ϕ8mm / Dovetail
Magnetic Adsorption (approx.)	800N			
Magnet ON / OFF	○	○	○	○
Main post Size (mm)	ϕ12 × 178		ϕ14 × 178	ϕ16 × 340
Arm Size (mm)	ϕ10 × 165		ϕ12 × 165	–
Catalog Page	267	267	268	268

Product Photo				
Order No.	012875	012872	012705	012700
Product Name	Magnetic Base Lock Type	Magnetic Base Mini Type	Magnetic Base Mini Lock Type	Mini Magnetic Base
Model No.	SB-100G	SB-25M	MB-7	B-2
Features	Easy joint locking	Compact size for use in narrow space	Easy joint locking	Mini type
Holder Size	ϕ6mm / ϕ8mm / Dovetail	ϕ6.0mm	ϕ6.0mm / ϕ8.0mm / grooved	ϕ6mm
Magnetic Adsorption (approx.)	1000N	250N		80N
Magnet ON / OFF	○	○	○	×
Main post Size (mm)	145 + 125 + 50	ϕ7 × 54	58 + 64	31
Arm Size (mm)	–	–	–	–
Catalog Page	269	269	269	272

Product Photo				
Order No.	012701	012702	012703	012704
Product Name	Mini Magnetic Base Fine Adjustment Type	Mini Magnetic Base Fine Adjustment with Long Post	Mini Magnetic Base	Mini Magnetic Base
Model No.	B-3	B-4	B-5	MB-6
Features	Fine adjustment for easy position setting	Fine adjustment for easy position setting, with long main post	With universal joint for easy angle adjustment	Fine adjustment for easy position setting, with universal joint
Holder Size	ϕ6mm / Dovetail		ϕ6.0mm / ϕ8.0mm / Lug back dial gauge	ϕ8mm / Dovetail
Magnetic Adsorption (approx.)	65N		200N	
Magnet ON / OFF	×	×	×	×
Main post Size (mm)	31	90	28	62 + 15
Arm Size (mm)	89mm long arm	89mm long arm	89mm long arm	–
Catalog Page	272	273	273	274

MAGNETIC BASE STANDARD TYPE

Measuring instruments▶ Dial Gauge P240 ~245
Measuring instruments▶ Test Indicator P242・P248 ~249
Replacement part▶ Parts for Magnetic Base P270
Rust prevention▶ Zerust Film for Steel P380

Can be used with a lug back dial gauge

USE
- Measurements that require a dial gauge or dial indicator to be held in fixed position

MATERIAL
- Body: Rolled steel for general structure
- Magnet: Ferrite

FEATURES
- Standard type
- Removable with ON/OFF lever operation

SPECIFICATIONS
- Magnetic adsorption: **approx. 800N**
- Stem holder: ϕ6mm・ϕ8mm
- Lug back holder: ϕ6.5mm・ϕ8mm
- Main post screw: M8×P1.25

Parts for Magnetic Base⇒P270

● DIMENSIONS Units : mm

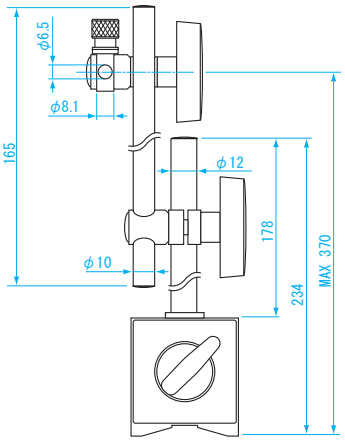

P366 Magnet Types and Characteristics

Order No.	Model No.	Base Dimension (mm)	Surface magnetic flux density (mT)	Weight
012870	SB-6C	50×60×55	Max. 100	1.5kg

MAGNETIC BASE FINE ADJUSTMENT TYPE

Measuring instruments▶ Dial Gauge P240 ~245
Measuring instruments▶ Test Indicator P242・P248 ~249
Replacement part▶ Parts for Magnetic Base P270
Rust prevention▶ Zerust Film for Steel P380

Can be used with a lug back dial gauge

USE
- Measurements that require a dial gauge or dial indicator to be held in fixed position

MATERIAL
- Body: Rolled steel for general structure
- Magnet: Ferrite

FEATURES
- Fine adjustment type (2mm adj. range)
- Removable with ON/OFF magnet operation

SPECIFICATIONS
- Magnetice adsorption: **approx. 800N**
- Stem holder: ϕ6mm・ϕ8mm
- Lug back holder: ϕ6.5mm・ϕ8mm
- Main post screw: M8×P1.25

Parts for Magnetic Base⇒P270

● DIMENSIONS Units : mm

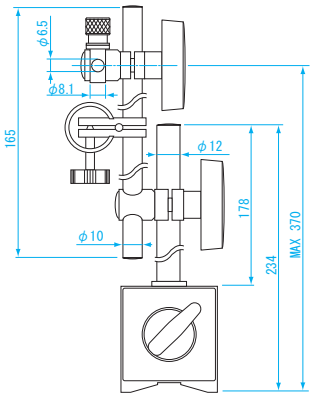

P366 Magnet Types and Characteristics

Order No.	Model No.	Base Dimension (mm)	Surface magnetic flux density (mT)	Weight
012871	SB-6B	50×60×55	Max. 100	1.5kg

MAGNETIC BASE THICK MAIN POST TYPE

Measuring instruments▶ Dial Gauge P240 ~245
Measuring instruments▶ Test Indicator P242・P248 ~249
Replacement part▶ Parts for Magnetic Base P270
Rust prevention▶ Zerust Film for Steel P380

Can be used with a lug back dial gauge

USE
- Measurements that require a dial gauge or dial indicator to be held in fixed position

MATERIAL
- Body: Rolled steel for general structure
- Magnet: Ferrite

FEATURES
- Thick main post (ϕ14) and arm (ϕ12) for stable holding of measuring tools
- Removable with ON/OFF magnet operation

SPECIFICATIONS
- Magnetice adsorption: **approx. 800N**
- Stem holder: ϕ6mm・ϕ8mm
- Lug back holder: ϕ6.5mm・ϕ8mm
- Main post screw: M8×P1.25

Parts for Magnetic Base⇒P270

● DIMENSIONS Units : mm

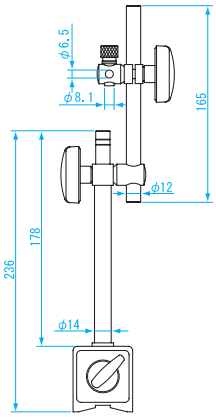

P366 Magnet Types and Characteristics

Order No.	Model No.	Base Dimension (mm)	Surface magnetic flux density (mT)	Weight
012873	SB-80P	50×60×55	Max. 100	1.5kg

MAGNETIC BASE FLEXIBLE POST TYPE

Measuring instruments▶ Dial Gauge P240 ~245
Measuring instruments▶ Test Indicator P242・P248 ~249
Replacement part▶ Parts for Magnetic Base P271
Rust prevention▶ Zerust Film for Steel P380

USE
- Measurements that require a dial gauge or dial indicator to be held in fixed position

MATERIAL
- Body: Rolled steel for general structure
- Magnet: Ferrite

FEATURES
- Flexible post for quick and easy positioning. One touch lever to fix position securely.
- Removable with ON/OFF magnet operation

SPECIFICATIONS
- Magnetice adsorption: **approx. 800N**
- Stem holder: ϕ6mm・ϕ8mm
- With dovetail mount
- Main post screw: M8×P1.25

Parts for Magnetic Base⇒P271

● DIMENSIONS Units : mm

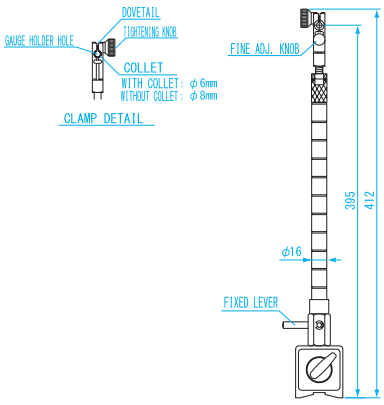

P366 Magnet Types and Characteristics

Order No.	Model No.	Base Dimension (mm)	Surface magnetic flux density (mT)	Weight
012874	SB-80F	50×60×55	Max. 100	1.3kg

MAGNETIC BASE LOCK TYPE

Measuring instruments▶ Dial Gauge P240 ~245
Measuring instruments▶ Test Indicator P242・P248 ~249
Replacement part▶ Parts for Magnetic Base P271
Rust prevention▶ Zerust Film for Steel P380

USE
- Measurements that require a dial gauge or dial indicator to be held in fixed position

MATERIAL
- Body: Rolled steel for general structure
- Magnet: Ferrite

FEATURES
- Mechanical lock knob tightens all joints with a single operation
- Removable with ON/OFF magnet operation

SPECIFICATIONS
- Magnetice adsorption: **approx.1000N**
- Stem holder: ϕ6mm・ϕ8mm
- With dovetail mount
- Main post screw: M8×P1.255

Parts for Magnetic Base⇒P271

● DIMENSIONS Units : mm

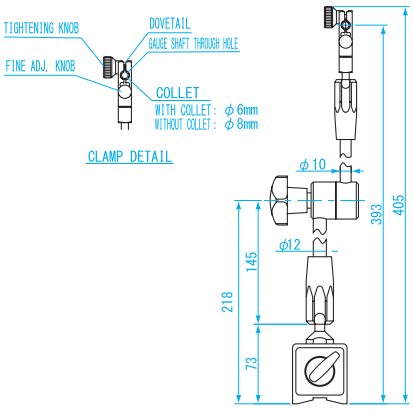

P366 Magnet Types and Characteristics

Order No.	Model No.	Base Dimension (mm)	Surface magnetic flux density (mT)	Weight
012875	SB-100G	50×75×55	Max. 100	1.7kg

MAGNETIC BASE MINI TYPE

Replacement part▶ Parts for Magnetic Base P271
Rust prevention▶ Zerust Film for Steel P380

● DIMENSIONS Units : mm

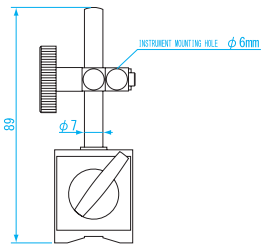

USE
- Measurements that require a dial indicator to be held in fixed position

MATERIAL
- Body: Rolled steel for general structure
- Magnet: Ferrite

FEATURES
- Compact size
- Removable with ON/OFF magnet operation

SPECIFICATIONS
- Magnetice adsorption: **approx. 250N**
- Stem holder: ϕ6mm
- Main post screw: M5×P0.8

P366 Magnet Types and Characteristics
Parts for Magnetic Base⇒P271

Order No.	Model No.	Base Dimension (mm)	Surface magnetic flux density (mT)	Weight
012872	SB-25M	30×35×35	Max. 100	270g

MAGNETIC BASE MINI LOCK TYPE

Measuring instruments▶ Dial Gauge P240 ~245
Measuring instruments▶ Test Indicator P242・P248 ~249
Replacement part▶ Parts for Magnetic Base P271
Rust prevention▶ Zerust Film for Steel P380

● DIMENSIONS Units : mm

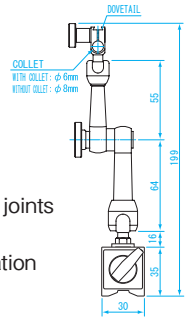

USE
- Measurements that require a dial indicator to be held in fixed position

MATERIAL
- Ferrite magnet

FEATURES
- Mechanical lock knob tightens all three joints with a single operation
- Removable with ON/OFF magnet operation

SPECIFICATIONS
- Magnetice adsorption: **approx. 250N**
- Stem holder: ϕ6mm・ϕ8mm
- With dovetail mount
- Main post screw: M5×P0.8

P366 Magnet Types and Characteristics
Parts for Magnetic Base⇒P271

Order No.	Model No.	Base Dimension (mm)	Surface magnetic flux density (mT)	Weight
012705	MB-7	30×35×35	Max. 100	550g

PARTS FOR MAGNETIC BASE

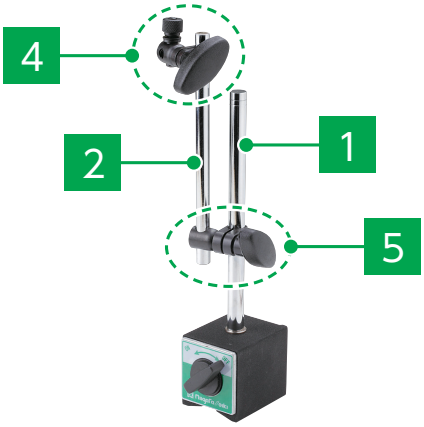

MAGNETIC BASE STANDARD TYPE SB-6C

P267

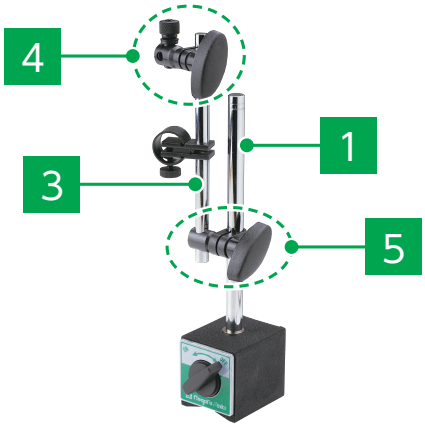

MAGNETIC BASE WITH FINE ADJUSTMENT TYPE SB-6B

P267

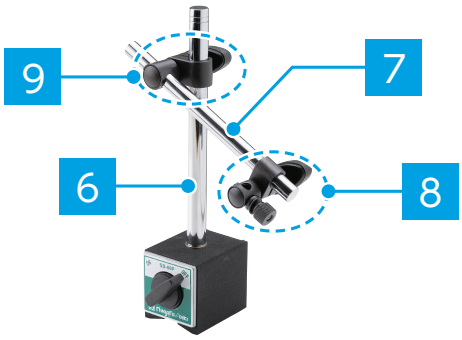

MAGNETIC BASE THICK MAIN POST TYPE SB-80P

P268

1 MAIN POST FOR SB-6（ϕ12）

Order No.	012691
Model No.	SB6-MP
Compatible Model No.	SB-6C SB-6B

2 ARM FOR SB-6C（ϕ10）

Order No.	012694
Model No.	SB6C-SP
Compatible Model No.	SB-6C

3 ARM FOR SB-6B（ϕ10）

Order No.	012681
Model No.	SB6B-SP
Compatible Model No.	SB-6B

4 GAUGE CLAMP KNOB FOR SB-6

Order No.	012692
Model No.	SB6-GK
Compatible Model No.	SB-6C SB-6B

5 POST CLAMP KNOB FOR SB-6

Order No.	012693
Model No.	SB6-CK
Compatible Model No.	SB-6C SB-6B

6 MAIN POST FOR SB-80P（ϕ14）

Order No.	012682
Model No.	SB80P-MP
Compatible Model No.	SB-80P

7 ARM FOR SB-80P（ϕ12）

Order No.	012683
Model No.	SB80P-SP
Compatible Model No.	SB-80P

8 GAUGE CLAMP KNOB FOR SB-80P

Order No.	012684
Model No.	SB80P-GK
Compatible Model No.	SB-80P

9 POST CLAMP KNOB FOR SB-80P

Order No.	012685
Model No.	SB80P-CK
Compatible Model No.	SB-80P

PARTS FOR MAGNETIC BASE

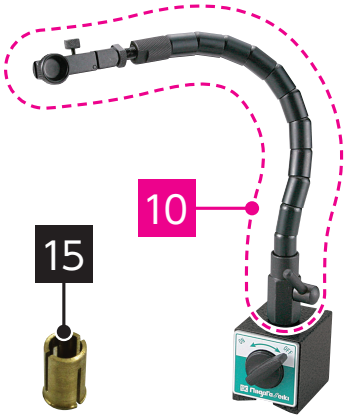

MAGNETIC BASE FLEXIBLE POST TYPE SB-80F P268

MAGNETIC BASE LOCK TYPE SB-100G P269

MAGNETIC BASE MINI TYPE SB-25M P269

MAGNETIC BASE MINI LOCK TYPE MB-7 P269

10 FREXIBLE POST FOR SB-80F

Order No.	012686
Model No.	SB80F-MPS
Compatible Model No.	SB-80F

11 LOCK ARM FOR SB-100G

Order No.	012687
Model No.	SB100G-LAS
Compatible Model No.	SB-100G

12 MAIN POST FOR SB-25M(ϕ7)

Order No.	012688
Model No.	SB25M-MP
Compatible Model No.	SB-25M

13 GAUGE CLAMP KNOB FOR SB-25M

Order No.	012689
Model No.	SB25M-GK
Compatible Model No.	SB-25M

14 LOCK ARM FOR MB-7

Order No.	012690
Model No.	MB7-LAS
Compatible Model No.	MB-7

15 COLLET FOR DIAL GAUGE MOUNT(ϕ6)

Order No.	012695
Model No.	BC-6
Compatible Model No.	SB-80F SB-100G MB-7

MINI MAGNETIC BASE

Can be used in narrow space or on machines

Measuring instruments▶ Test Indicator P242・P248 ~249
Rust prevention▶ Zerust Film for Steel P380

USE
- Measurements that require a dial indicator to be held in fixed position

MATERIAL
- Alnico magnet

FEATURES
- Excellent holding force using high power alnico magnet
- Fixed type

SPECIFICATIONS
- Magnetice adsorption: **approx. 80N**
- Stem holder: ϕ6mm
- Main post screw: M5×P0.8

● DIMENSIONS Units: mm

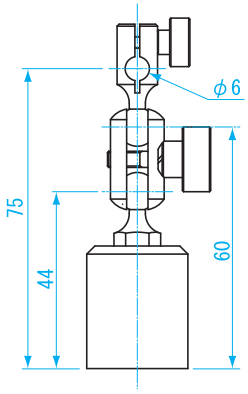

P366 Magnet Types and Characteristics

Order No.	Model No.	Base Dimension (mm)	Surface magnetic flux density (mT)	Weight
012700	B-2	ϕ25×30	Max. 50	160g

MINI MAGNETIC BASE FINE ADJUSTMENT TYPE

Can be used in narrow space or on machines

Measuring instruments▶ Test Indicator P242・P248 ~249
Rust prevention▶ Zerust Film for Steel P380

USE
- Measurements that require a dial indicator to be held in fixed position

MATERIAL
- Alnico magnet

FEATURES
- Excellent holding force using high power alnico magnet
- 89mm long arm
- With fine adjustment (0.5mm adj. range)

SPECIFICATIONS
- Magnetice adsorption: **approx. 65N**
- Stem holder: ϕ6mm
- With dovetail mount
- Main post screw: M5×P0.8

● DIMENSIONS Units: mm

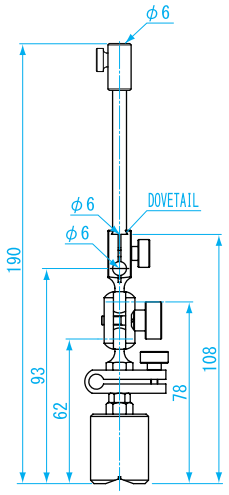

P366 Magnet Types and Characteristics

Order No.	Model No.	Base Dimension (mm)	Surface magnetic flux density (mT)	Weight
012701	B-3	25×25×25	Max. 50	230g

MINI MAGNETIC BASE FINE ADJUSTMENT WITH LONG POST

Can be used in narrow space or on machines

Measuring instruments▶ Test Indicator P242・P248 ~249
Rust prevention▶ Zerust Film for Steel P380

● DIMENSIONS Units: mm

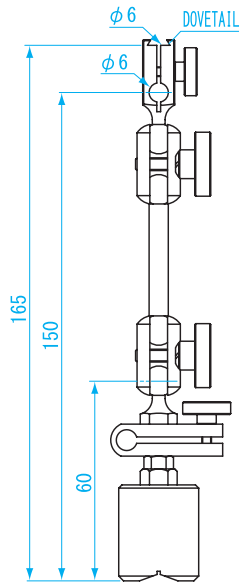

USE
- Measurements that require a dial indicator to be held in fixed position

MATERIAL
- Alnico magnet

FEATURES
- Excellent holding force using high power alnico magnet
- Two joints
- 89mm long arm
- With fine adjustment (0.5mm adj. range)

SPECIFICATIONS
- Magnetice adsorption: **approx. 65N**
- Stem holder: φ6mm
- With dovetail mount
- Main post screw: M5×P0.8

P366 Magnet Types and Characteristics

Order No.	Model No.	Base Dimension (mm)	Surface magnetic flux density (mT)	Weight
012702	B-4	25×25×30	Max. 50	280g

MINI MAGNETIC BASE

Can be used in narrow space or on machines

Measuring instruments▶ Test Indicator P242・P248 ~249
Rust prevention▶ Zerust Film for Steel P380

● DIMENSIONS Units: mm

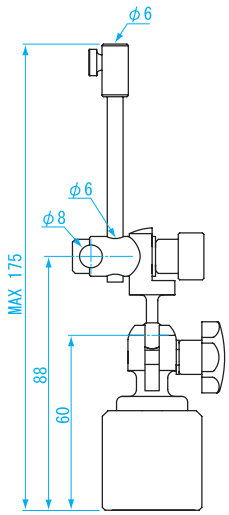

USE
- Measurements that require a dial indicator to be held in fixed position

MATERIAL
- Alnico magnet

FEATURES
- Strong holding force using alnico magnet
- Universal joint can be set to any angle
- Locking knob for easy tightening

SPECIFICATIONS
- Magnetice adsorption: **approx. 200N**
- Stem holder: φ6mm・φ8mm
- With clamp for mounting dial gauge
- Main post screw: M5×P0.8

P366 Magnet Types and Characteristics

Order No.	Model No.	Base Dimension (mm)	Surface magnetic flux density (mT)	Weight
012703	B-5	φ35×32	Max. 90	270g

MINI MAGNETIC BASE FINE ADJUSTMENT TYPE

Can be used in narrow space or on machines

Measuring instruments▶ Test Indicator P242・P248 ～249
Rust prevention▶ Zerust Film for Steel P380

USE
- Measurements that require a dial indicator to be held in fixed position

MATERIAL
- Alnico magnet

FEATURES
- Strong holding force using alnico magnet
- Universal joint can be set to any angle
- Locking knob for easy tightening
- With fine adjustment (0.5mm adj. range)

SPECIFICATIONS
- Magnetice adsorption: **approx. 200N**
- Stem holder: ϕ8mm
- With dovetail mount
- Main post screw: M5×P0.8

● DIMENSIONS Units : mm

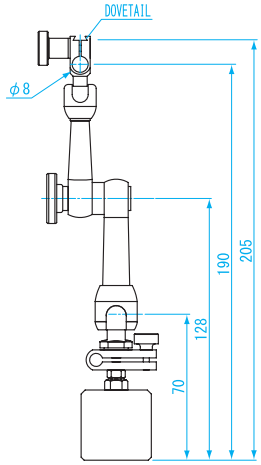

P366 Magnet Types and Characteristics

Order No.	Model No.	Base Dimension (mm)	Surface magnetic flux density (mT)	Weight
012704	MB-6	ϕ35×32	Max. 90	510g

VACUUM CLAMPING BASE

Enables to use dial indicator on non-magnetic surface such as granite surface plate

Measuring instruments▶ Dial Gauge P240 ～245
Measuring instruments▶ Test Indicator P242・P248 ～249
Precision surface plate▶ Granite Surface Plate P284

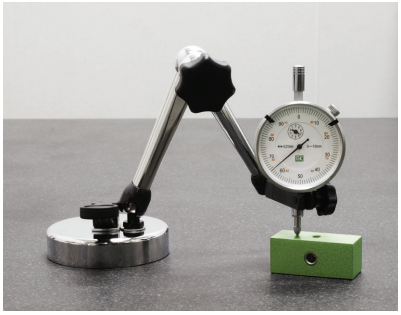

USE
- For mounting dial gauge and dial indicator

MATERIAL
- Main body: Aluminum
- Suction cup: Rubber

FEATURES
- Suction cup for fixing to non-magnetic surface such as granite surface plate

SPECIFICATIONS
- Holding force: **approx.200N**
- Stem holder: ϕ6・ϕ8
- With dove tail groove

● DIMENSIONS Units : mm

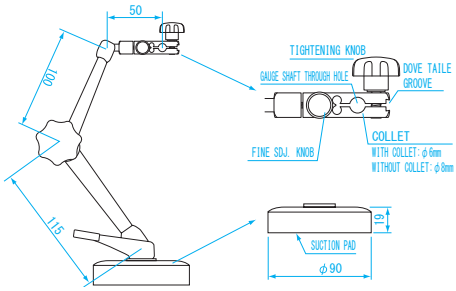

Order No.	Model No.	Base Dimension (mm)	Weight
011756	VB-200	ϕ90×19	540g